E5AF/E5EF
Fuzzy Temperature Controller

Operation Manual

Produced July 1992

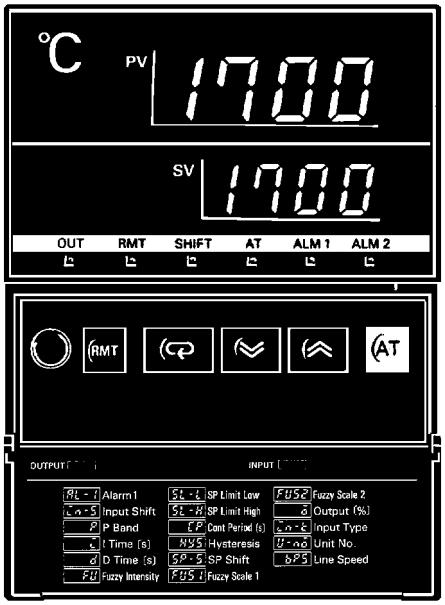

Notice:

OMRON products are manufactured for use according to proper procedures by a qualified operator and only for the purposes described in this manual.

The following conventions are used to indicate and classify warnings in this manual. Always heed the information provided with them.

DANGER! Indicates information that, if not heeded, could result in loss of life or serious injury.

Caution Indicates information that, if not heeded, could result in minor injury or damage to the product.

OMRON Product References

All OMRON products are capitalized in this manual. The word “Unit” is also capitalized when it refers to an OMRON product, regardless of whether or not it appears in the proper name of the product.

The abbreviation “PC” means Programmable Controller and is not used as an abbreviation for anything else.

Visual Aids

The following headings appear in the left column of the manual to help you locate different types of information.

Note Indicates information of particular interest for efficient and convenient operation of the product.

1, 2, 3... Indicates lists of one sort or another, such as procedures, precautions, etc.

© OMRON, 1992

All rights reserved. No part of this publication may be reproduced, stored in a retrieval system, or transmitted, in any form, or by any means, mechanical, electronic, photocopying, recording, or otherwise, without the prior written permission of OMRON.

No patent liability is assumed with respect to the use of the information contained herein. Moreover, because OMRON is constantly striving to improve its high–quality products, the information contained in this manual is subject to change without notice. Every precaution has been taken in the preparation of this manual. Nevertheless, OMRON assumes no responsibility for errors or omissions. Neither is any liability assumed for damages resulting from the use of the information contained in this publication.

TABLE OF CONTENTS

SECTION 1
Front Panel: Nomenclature and Functions 1

1–1 Front Panel 2
1–2 Remote Mode and Local Mode 2

SECTION 2
Rear Terminals 5

2–1 Connector/Terminal 6
2–2 Connecting Communications Connectors 9

SECTION 3
Using the RS-232C/RS-422/RS-485 Models 11

3–1 Interface Specifications 12
3–2 Before Applying Power 18
3–3 Key Operation 20
3–4 General RS-232C/RS-422/RS-485 Specifications 21
3–5 Communications and Error Control 21
3–6 Header Codes 24
3–7 Selection of Write Modes 25
3–8 RAM Data All Save 26
3–9 Remote/Local Mode Selection 26
3–10 Set Value Write 27
3–11 Set Value Read 27
3–12 Set Limit Read 28
3–13 Process Temperature Read 29
3–14 Heater Current Value Read 30
3–15 Initial Status Read 31
3–16 Auto-tuning Start 33
3–17 Auto-tuning Stop 34
3–18 Undefined Error 34
3–19 End Code List 35
3–20 Communications Time 36
3–21 Communications Program Example 37

SECTION 4
BCD Models 41

4–1 Communications Connectors 42
4–2 Setting Before Power Application 44
4–3 Operations: Front Key Section 44
4–4 Important Notes on Communications Programming 44
4–5 Data Select Code 45
4–6 Timing Chart 48
4–7 E5AF-A20: Application Example #1 49
4–8 E5AF-A20: Application Example #2 58

SECTION 5
Transmission Output Models 67

5–1 Connection of Output Connector 68
5–2 Settings Before Switching Power On 69

Appendices **71**
A. ASCII List 71
B. List of Optional Accessories 73
Index **75**

Revision History **81**

About this Manual:

The manual describes the operation of the E5AF/E5EF Fuzzy Temperature Controller and includes the sections described below.

Please read this manual completely and be sure you understand the information provided before attempting to operate the Fuzzy Temperature Controller.

Section 1 introduces the basic features of the E5AF/E5EF Fuzzy Temperature Controller's front panel and a brief description of its remote mode and local mode.

Section 2 gives a general description of the E5AF/E5EF Fuzzy Temperature Controller's rear panel communications connector/terminals.

Section 3 provides the interface specifications and basic operational elements required in order to use the RS-232C/RS-422/RS-485 Controllers and also provides the header codes.

Section 4 provides the basic operational elements required in order to use the BCD Output Models and also gives two examples of its use.

Section 5 describes the connections and settings of the Transmission Output Models.

Appendix A provides an ASCII list.

Appendix B provides a list of optional accessories.

SECTION 1
Front Panel: Nomenclature and Functions

This section gives a brief and general description of the E5AF/E5EF Fuzzy Temperature Controller's front panel.

1–1 Front Panel 2
1–2 Remote Mode and Local Mode 2

1–1 Front Panel

The following diagram identifies the major features found on the Fuzzy Temperature Controller front panel and gives a brief description of the function of each front panel feature.

E5AF-A_

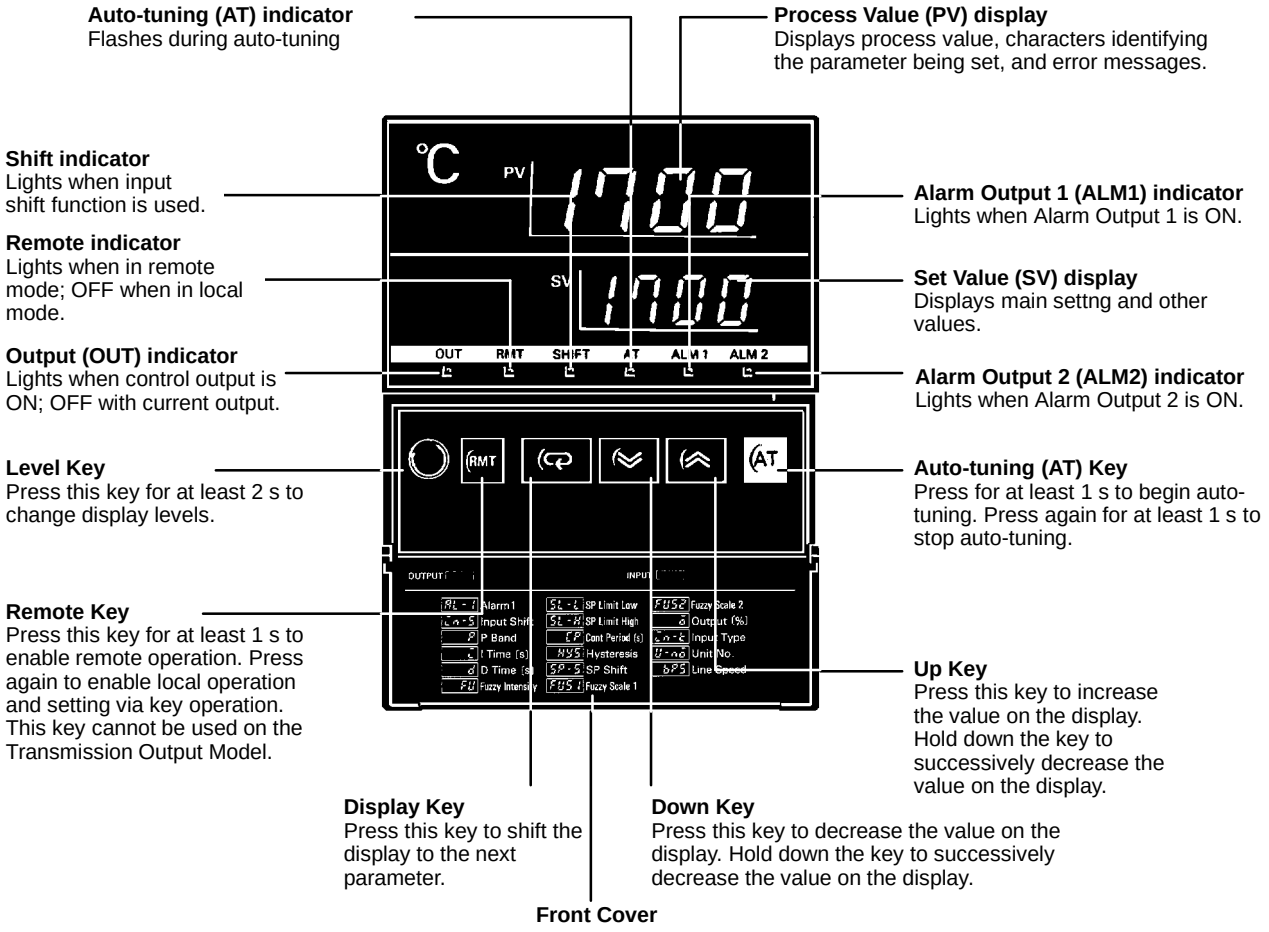

1–2 Remote Mode and Local Mode

Remote mode

Pressing the Remote Key puts the E5AF/E5EF in remote mode. In remote mode, the keys on the front panel of the E5AF/E5EF cannot be used, except for monitoring the set value with the Display Key, Level Key, and Remote Key.

Local mode

Pressing the Remote Key again puts the E5AF/E5EF in local mode and enables settings via keys on the front panel. In the local mode, the E5AF/E5EF cannot be remotely controlled, except for reading of the process temperature.

The changing from one mode to the other cannot be remotely controlled.

The Heater Burnout Detection Models are shown below.

E5AF-AH

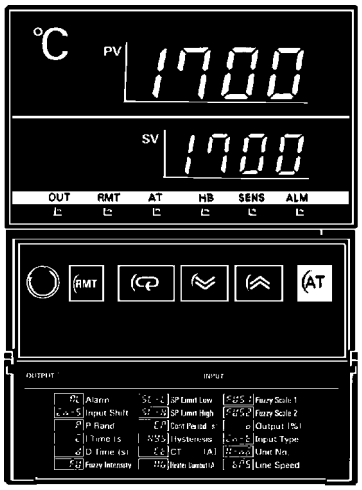

E5EF-AH

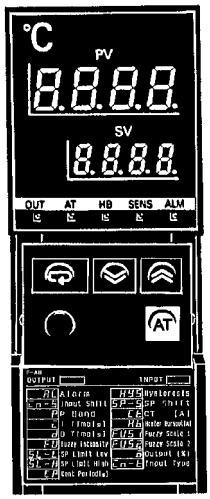

SECTION 2
Rear Terminals

This section gives a general description of the E5AF/E5EF rear panel communications connector/terminals. Depending upon the requirements, one of several connector/terminal types can be selected for use with the E5AF/E5EF Fuzzy Temperature Controller.

2–1 Connector/Terminal 6
2–2 Connecting Communications Connectors 9

2–1 Connector/Terminals

Depending upon the requirements, one of several connector/terminals can be used.

Communications connector
A 25-pin D-sub Connector for connecting to the host computer when communications are executed using RS-232C or BCD.

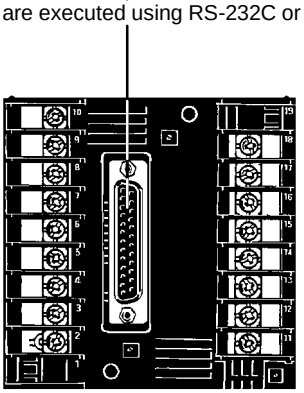

E5AF-_01 (RS-232C)
E5AF-_20 (BCD)

Communications connector
A 9-pin D-sub Connector for connecting to the host computer when communications are executed using RS422, RS485 or transmission output.

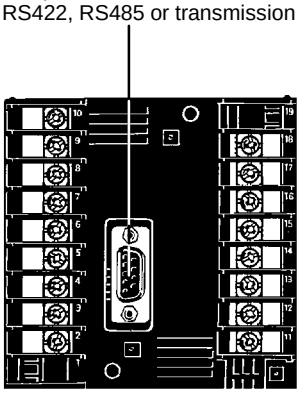

E5AF-_02 (RS-422)
E5AF-_03 (RS-485)
E5AF-_F (transmission output)

Communications terminal (5P)

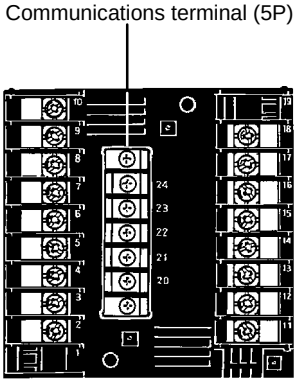

E5AF-_02-X (RS-422)
E5AF-_03-X (RS-485)

Communications terminal (2P)

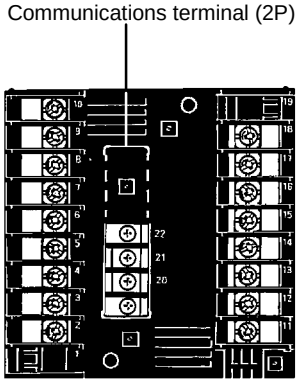

E5AF-_F-X
(transmission output)

Terminal Connections

E5EF-A

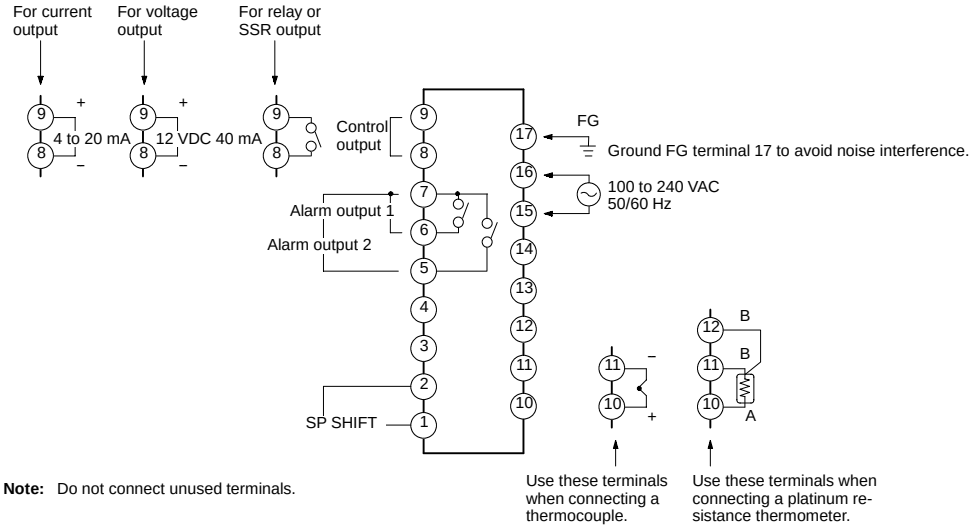

Note: Do not connect unused terminals.

E5EF-AH (with Heater Burnout Alarm)

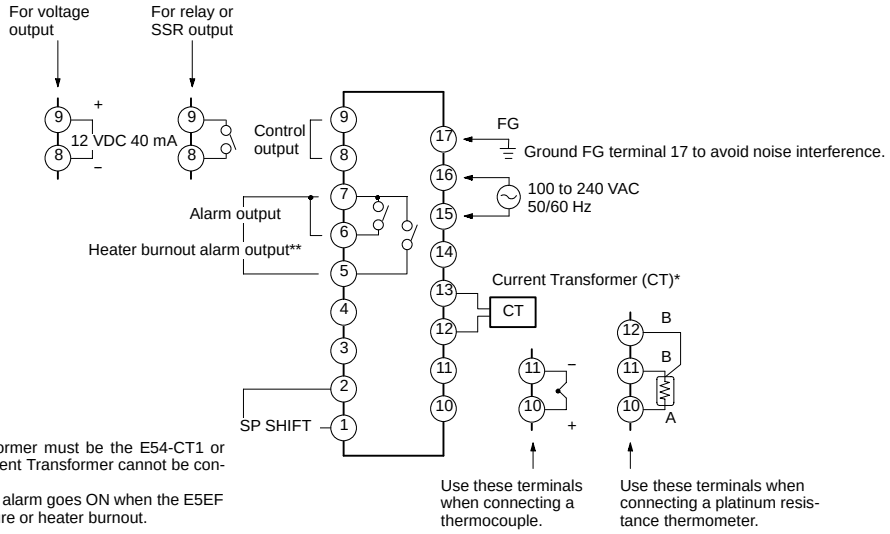

Note: *The Current Transformer must be the E54-CT1 or E54-CT3. Other Current Transformer cannot be connected.
**The heater burnout alarm goes ON when the E5EF detects a sensor failure or heater burnout.

E5EF-BA (with 8 Memory Banks)

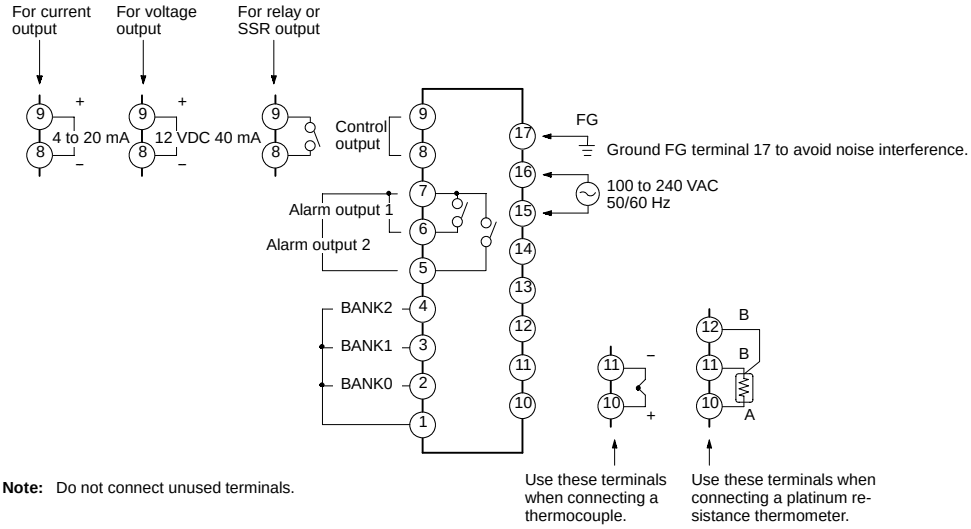

Note: Do not connect unused terminals.

E5EF-BAH (with 8 Memory Banks and Heater Burnout Alarm)

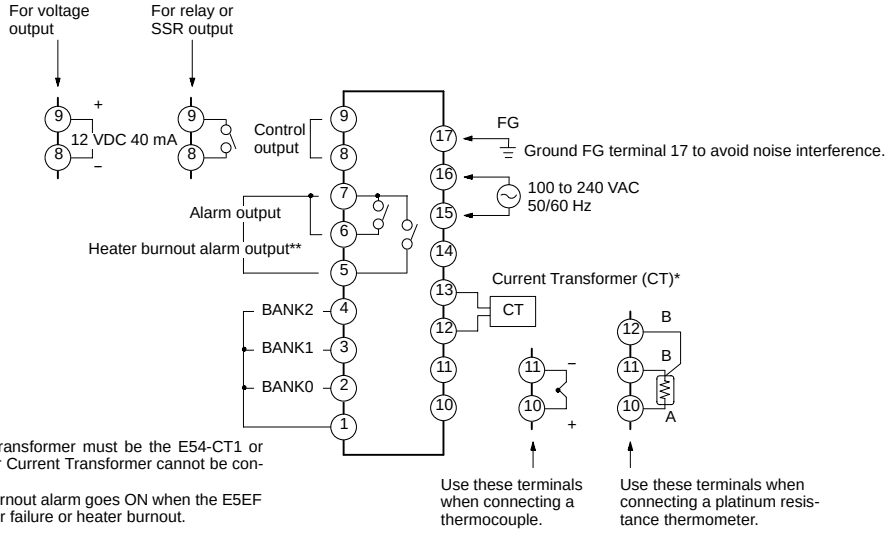

Note: *The Current Transformer must be the E54-CT1 or E54-CT3. Other Current Transformer cannot be connected.
**The heater burnout alarm goes ON when the E5EF detects a sensor failure or heater burnout.

E5EF-A02 (with RS-422 Communications)

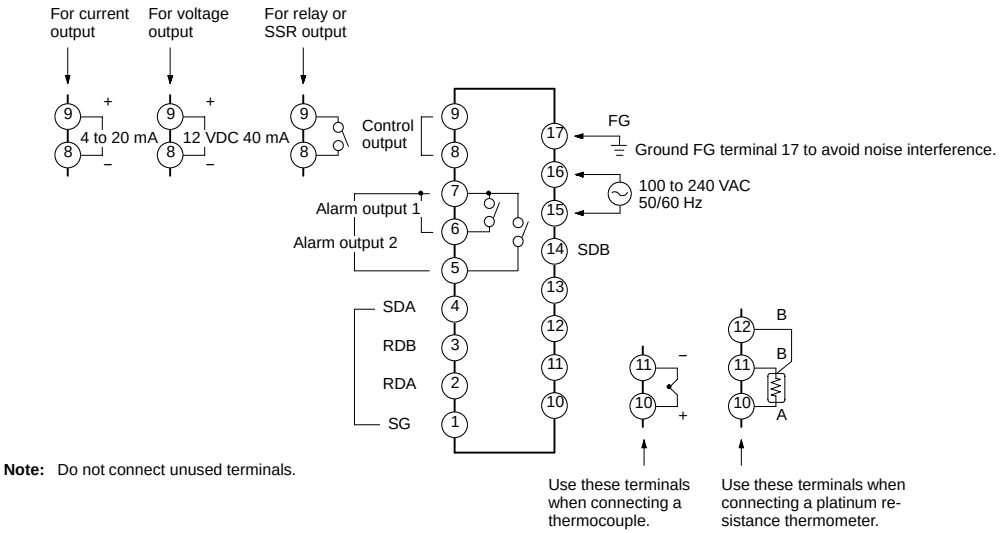

Note: Do not connect unused terminals.

E5EF-AH02 (with RS-422 Communications and Heater Burnout Alarm)

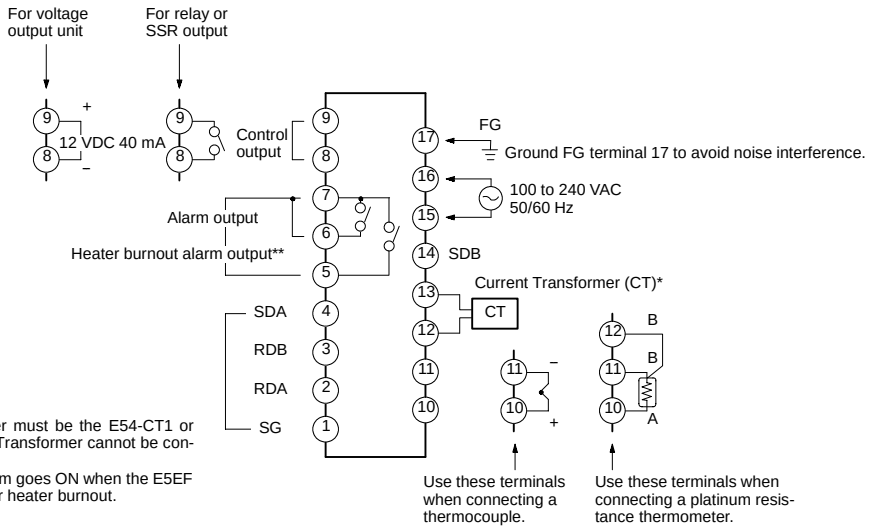

Note: *The Current Transformer must be the E54-CT1 or E54-CT3. Other Current Transformer cannot be connected.
**The heater burnout alarm goes ON when the E5EF detects a sensor failure or heater burnout.

E5EF-A03 (with RS-485 Communications)

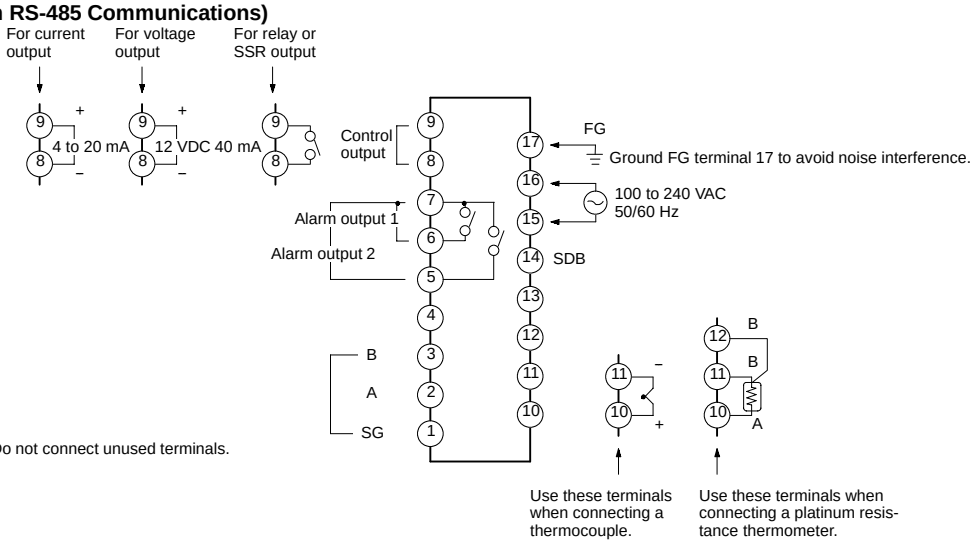

Note: Do not connect unused terminals.

E5EF-AH03 (with RS-485 and Heater Burnout Alarm)

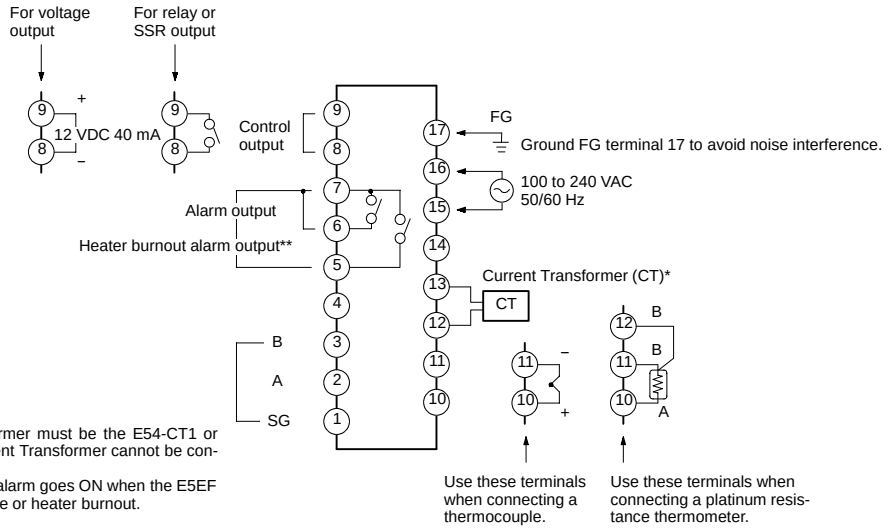

Note: *The Current Transformer must be the E54-CT1 or E54-CT3. Other Current Transformer cannot be connected.
**The heater burnout alarm goes ON when the E5EF detects a sensor failure or heater burnout.

2–2 Connecting Communications Connectors/Terminals

Connect a host system or peripheral device to the appropriate communications connector; confirm that the system or device conforms to that connector's communications specifications. Before mounting the Fuzzy Temperature Controller, be sure to consider the added depth required by connected cables.

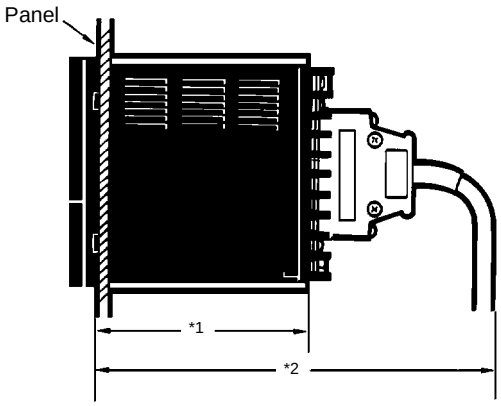

Depth of the main body from panel when mounted	
***1: Without OMRON XM4 D-sub Connector**	***2: With OMRON XM4 D-sub Connector**
100 mm	No less than 170 mm (25-pin connector) No less than 160 mm (9-pin connector)

The following OMRON D-sub Connectors are recommended:

25 pin: XM4A-2521 (plug) + XM2S-2511 (hood)
9 pin: XM4A-0921 (plug) + XM2S-0911 (hood)

If using an equivalent connector, make sure that the connector screws are the following metric size: M2.6 x 0.45 mm.

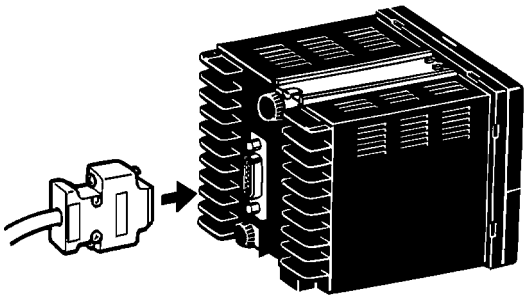

Securely insert the communications connector from the external system into the communications connector on the Temperature Controller. After connection, tighten the screws on either side of the communications connector with a screwdriver.

When connecting communications via terminal blocks, use crimp-style terminals of the appropriate size for use with M3 x 8 mm connector screws.

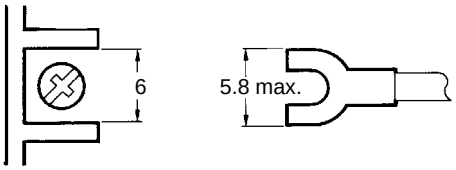

For the appropriate cable length, refer to the respective communications specifications.

SECTION 3
Using the RS-232C/RS-422/RS-485 Controllers

This section provides the interface specifications and basic elements required in order to use the RS-232C/RS-422/RS-485 Controllers. The header codes are also provided in this section in addition to both a communications program and operation example.

3–1 Interface Specifications 12
3–1–1 RS-232C 12
3–1–2 RS-422 13
3–1–3 RS-485 16
3–2 Before Applying Power 18
3–3 Key Operation 20
3–4 General RS-232C/RS-422/RS-485 Specifications 21
3–5 Communications and Error Control 21
3–5–1 Communications Control Procedures 21
3–5–2 Blocks 22
3–5–3 Error Control 22
3–5–4 Precautions 23
3–6 Header Codes 24
3–7 Selection of Write Modes 25
3–8 RAM Data All Save 26
3–9 Remote/Local Mode Selection 26
3–10 Set Value Write 27
3–11 Set Value Read 27
3–12 Set Limit Read 28
3–13 Process Temperature Read 29
3–14 Heater Current Value Read 30
3–15 Initial Status Read 31
3–16 Auto-tuning Start 33
3–17 Auto-tuning Stop 34
3–18 Undefined Error 34
3–19 End Code List 35
3–20 Communications Time 36
3–21 Communications Program Example 37
3–21–1 Program Example of RS-232C/RS-422/RS-485 Communications 37
3–21–2 Operation Example 40

3–1 Interface Specifications

3–1–1 RS-232C

This interface is for the E5AF only. Electrical characteristics conform to EIA RS-232C.

Communications Signals

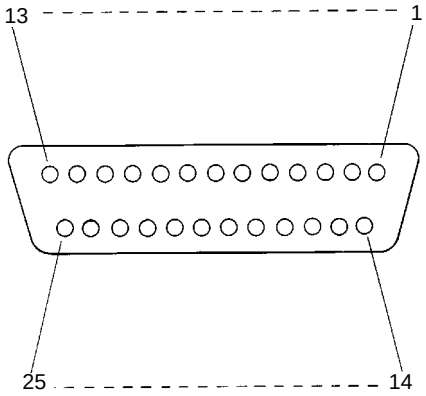

Signal	Abbreviation	Signal direction	Pin no.
Frame ground (safety ground)	FG	–––	1
Signal ground or common return	SG	–––	7
Send data	SD	Output	2
Receive data	RD	Input	3
Request to send	RS	Output	4
Clear to send	CS	Input	5
Data set ready	DR	Input	6
Data terminal ready	ER	Output	20

Connection Diagram

The following diagram shows how the E5AF is connected to the host computer using the RS-232C.

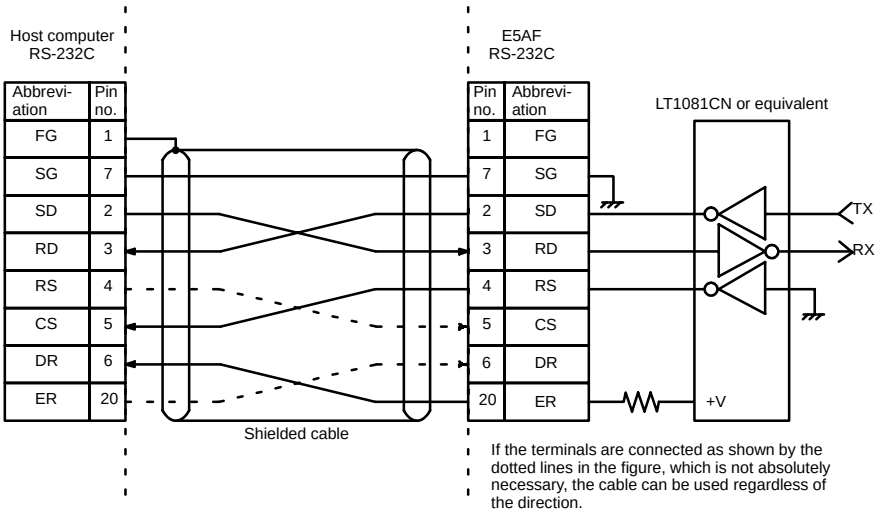

Synchronization: Internal clock

Cable length: 15 m maximum. To increase the cable length, use OMRON's RS-232C optical interface (Z3RN).

Applicable connectors: Plug: XM4A-2521 (OMRON) or equivalent
Hood: XM2S-2511 (OMRON) or equivalent

Connection method (RS-232C direct connection): 1:1 connection only

A carrier detect (CD) signal for the host computer is not supported by the E5AF via its RS-232C port since the E5AF's RS-232C is defined as DTE (Data Terminal Equipment). If a CD signal is needed, it must be provided a the host computer.

3–1–2 RS-422

Electrical characteristics conform to EIA RS-422.

Communications Signals

The following information identifies the input/output signals of the interface.

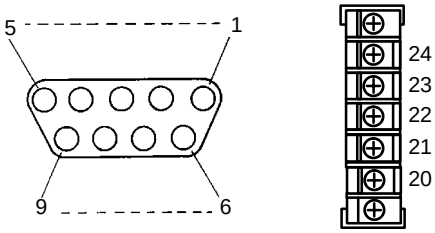

Connector Terminals

Signal	Abbreviation	Signal direction	Connector pin no.	Terminal no.
Send Data A	SDA	Output	9	21
Send Data B	SDB	Output	5	20
Receive Data A	RDA	Input	6	23
Receive Data B	RDB	Input	1	24
Signal Ground	SG	–––	3	22
Frame Ground (safety ground)	FG	–––	7	–––

Connection Diagram

The following illustration shows how the E5AF is connected to the host computer via RS-422.

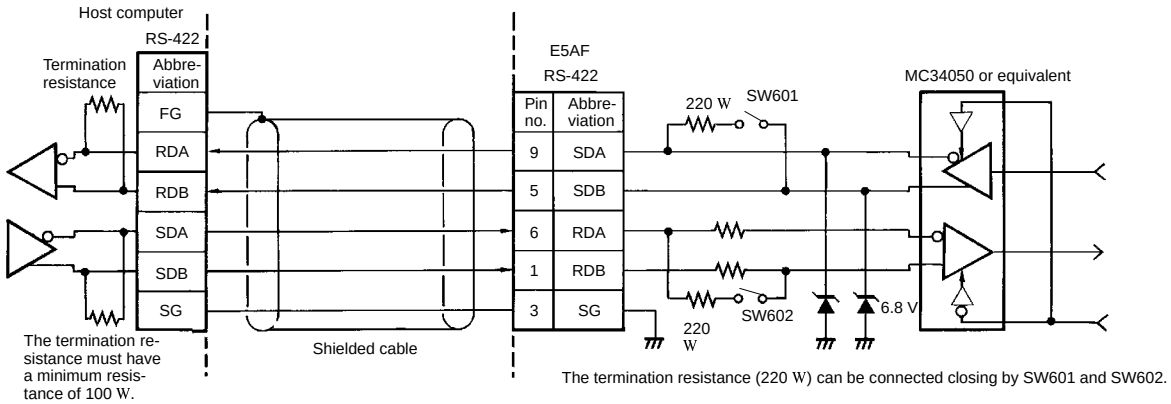

Synchronization: Internal clock

Cable length: 500 m maximum (total)

Applicable connectors: Plug: XM2A-0901 (OMRON) or equivalent
XM4A-0921 (OMRON) or equivalent
Hood: XM2S-0911 (OMRON) or equivalent

Connection method (RS-422 connection): Maximum 1:32 connection

Note SW601 and SW602 of the terminator must be turned on. SW601 and SW602 of the Controllers other than the terminator must be turned off.

RS-422 System Examples

The following example shows several E5AF-A02's connected to a personal computer using the RS-422 connection method with Link Adapters.

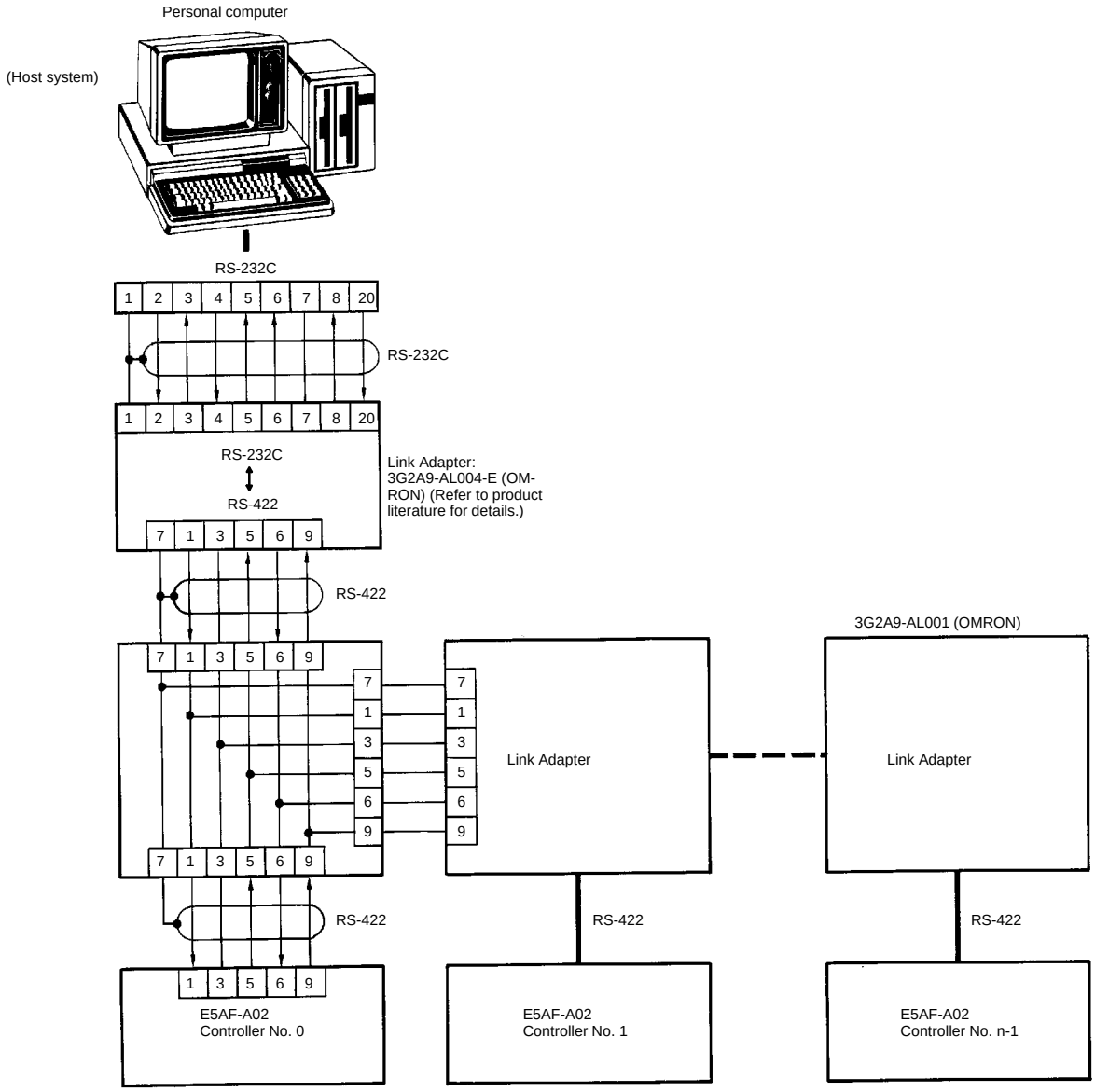

Up to 32 Controllers (n) can be connected. The maximum extended cable length is 500 m.

The following example shows several E5AF-A02-X's connected to a personal computer. Only one Link Adapter is required (to convert to RS-232C at the computer) because the Controllers are connected directly to each other.

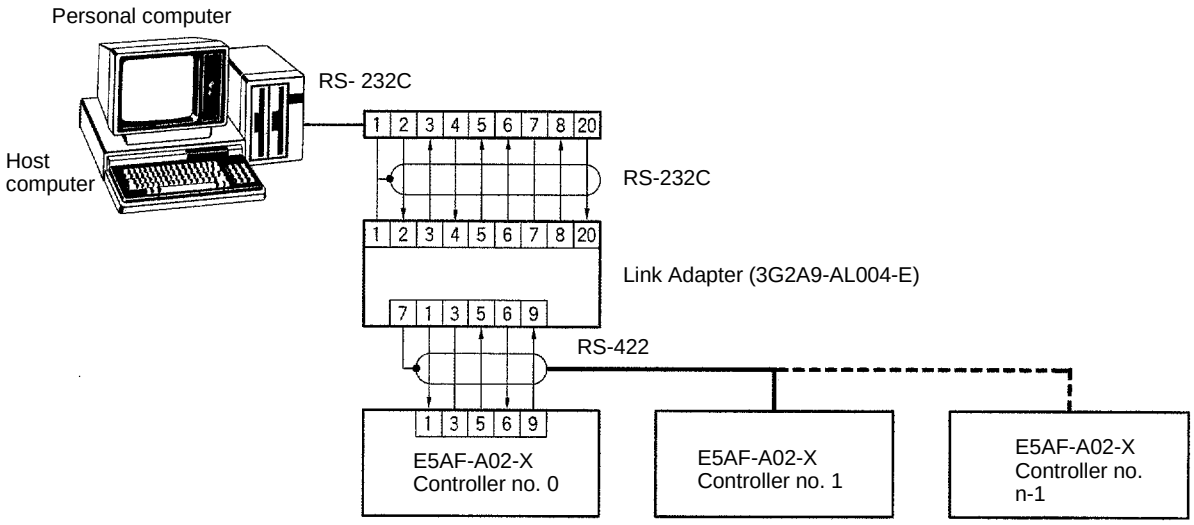

The maximum number of connecting Controllers (n) is 32 with a total cable length of 500 m maximum.

3–1–3 RS-485

Electrical characteristics conforms to EIA RS-485.

Communications Signals

The following information identifies the input/output signals of the interface.

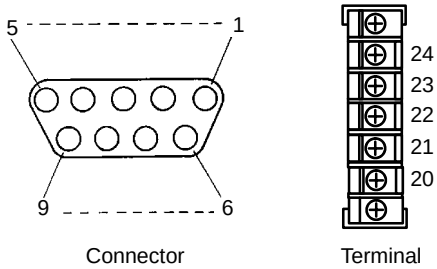

Signal	Abbreviation	Signal direction	Connector pin no.	Terminal no.
Inverted output	Negative (–) side	Input/output	9, 6 (common)	21, 23 (common)
Non-inverted output	Positive (+) side	Input/output	5, 1 (common)	20, 24 (common)
Signal ground	SG	–––	3	22

Connection Diagram

The following diagram shows how the E5AF is connected to the host computer using RS-485.

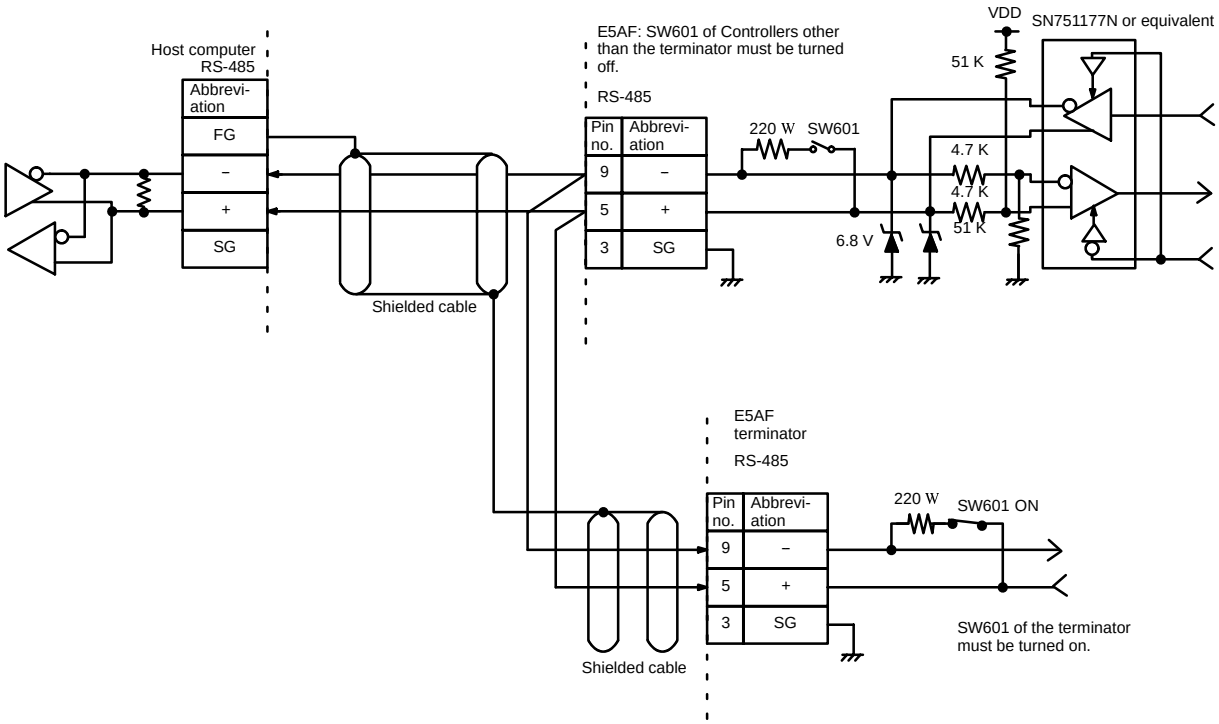

Synchronization: Internal clock

Cable length: 500 m maximum (total)

Applicable connectors: Plug: XM4A-0921 (OMRON) or equivalent
Hood: XM2S-0911 (OMRON) or equivalent

Connection method (RS-485 connection): Maximum 1:32 connection

Note In the connection diagram above, the Temperature Controllers cannot be connected to a SYSMAC Wired Remote I/O System (SYSMAC BUS).

3–2 Before Applying Power

Before switching on power to the E5AF, set the switches by following the procedures below.

Opening the E5AF

Disconnect the communications cable from the E5AF. Lift the internal mechanism while pressing the hook at the bottom of the front panel.

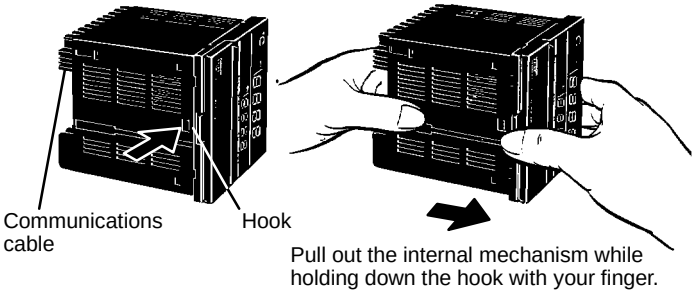

Mounting or Removing the Output Unit

To mount the Output Unit, insert it in the direction shown by the arrow. To remove it, first remove the communications board (A) by pulling it in the direction of the arrow (➡). Then remove the Output Unit.

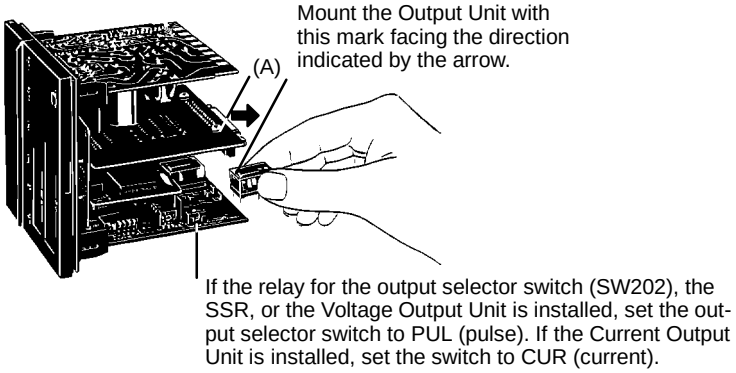

Function Switches

Refer to the E5AF instruction manual or the operating procedures in the datasheet for detailed information about setting the switches shown in the following diagram.

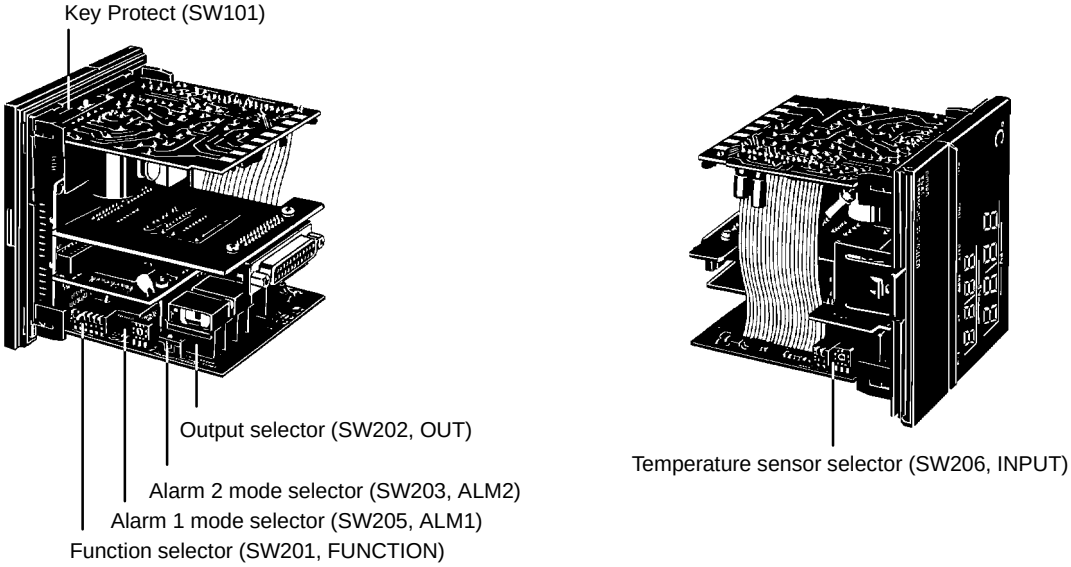

Terminator Designation

For the RS-422 (E5AF-A02) and RS-485 (E5AF-A03) Models, designate the E5AF located at both ends of the transmission line as an terminator by setting the terminator switch of that Controller to ON. (Terminator designation is not required for the RS-232C Models.)

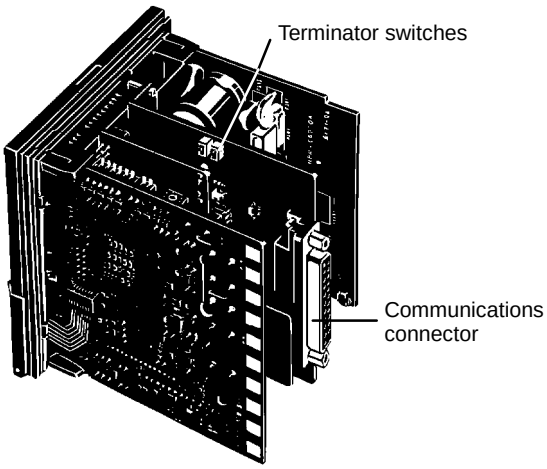

Terminator Switches

SW601 and SW602 are factory set to OFF. SW601 and SW602 of Controllers other than the terminator must be OFF.

Terminator	SW602	SW601
RS-422 designation	ON	ON
RS-485 designation	There is no SW602.	ON

Caution If a wrong Controller is designated as the terminator, the operating current will increase, thus causing the Fuzzy Temperature Controller to malfunction.

3–3 Key Operation

Before attempting communications when using RS-232C, RS-422, and RS-485 Models, set the baud rate (communications speed) and Controller number according to the following procedures; use the keys on the front of the Controller to make the settings. For operation procedures other than the following, refer to the operation manual supplied with the Controller or the operating procedures listed in the datasheet.

Display Levels

The E5AF/E5EF goes to display level 0 when power is turned on. The display level changes when the level key is pressed for two seconds or more. The displayed contents at each level are shown in the following diagram. The baud rate and Controller numbers can be set at display level 2.

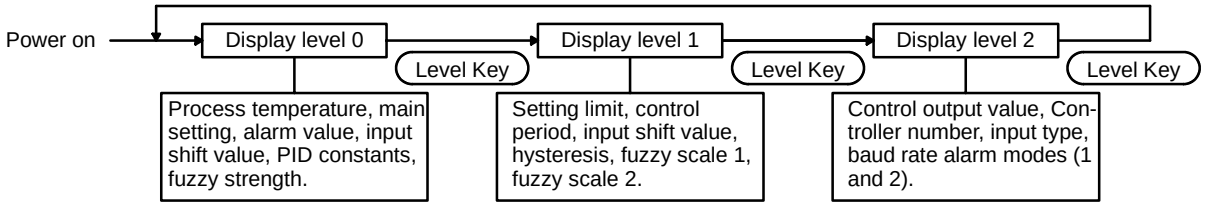

Setting the Controller Number and Baud Rate

Character Display:

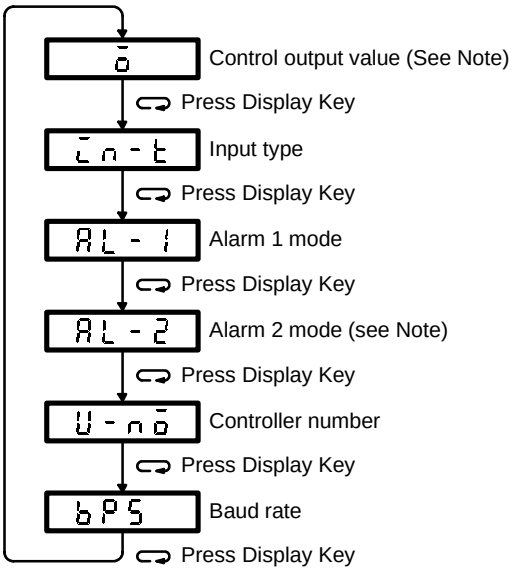

Note Heater Burnout Detection Models do not have a Alarm 2 mode display.

Controller Number (u-no): This setting assigns a Controller number (integers from 0 to 99) to each Fuzzy Temperature Controller to allow the host computer to distinguish one Fuzzy Temperature Controller from the others in the same system during communications. When u-no appears on the process value display, use the Up Key or Down Key to input a set value. The Controller number is set to 0 before shipment. Do not give identical Controller numbers to Fuzzy Temperature Controllers in the same system, as this will interfere with communications.

Baud Rate (bps): This sets the speed for communications with the host computer. When bps appears on the process value display, use the Up Key or Down Key to input a set value. The rate is set to 9600 bps before shipment. The baud rate can be set to 150, 300, 600, 1200, 2400, 4800, or 9600 bps. The set value becomes effective only after the E5AF/E5EF power is switched off once and then on again.

3–4 General RS-232C/RS-422/RS-485 Specifications

Transmission line connection:	Multiple point
Communications system:	RS-232C/RS-422 (4-wire, half-duplex), RS-485 (2-wire, half-duplex)
Synchronization system:	Start-stop synchronization (2 stop bits)
Communications speed:	150/300/600/1200/2400/4800/9600 bps
Communications code:	ASCII (7 bits)
Error detection:	Vertical parity (even) and FCS (frame check sequence)
Interface:	RS-232C/RS-422/RS-485

Definition of Terminal: DTE (Data Terminal Equipment)

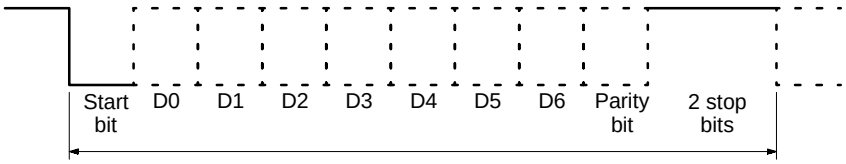

The E5AF RS-232C is defined as DTE (Data Terminal Equipment). This means that a carrier detect (CD) signal for the host computer is not supported. If a CD signal is needed, it must be provided (via the +12 V terminal) on the host computer side.

The communications specifications of the E5AF are the same as those of the E5AX, except for the commands that are used for the fuzzy function of the E5AF.

3–5 Communications and Error Control

The communications protocol for the E5AF/E5EF is a special conversational type. The first right to send belongs to the host computer, and the right is transferred with each block sent. Whenever a command block is sent, a response block is sent in return.

3–5–1 Communications Control Procedures

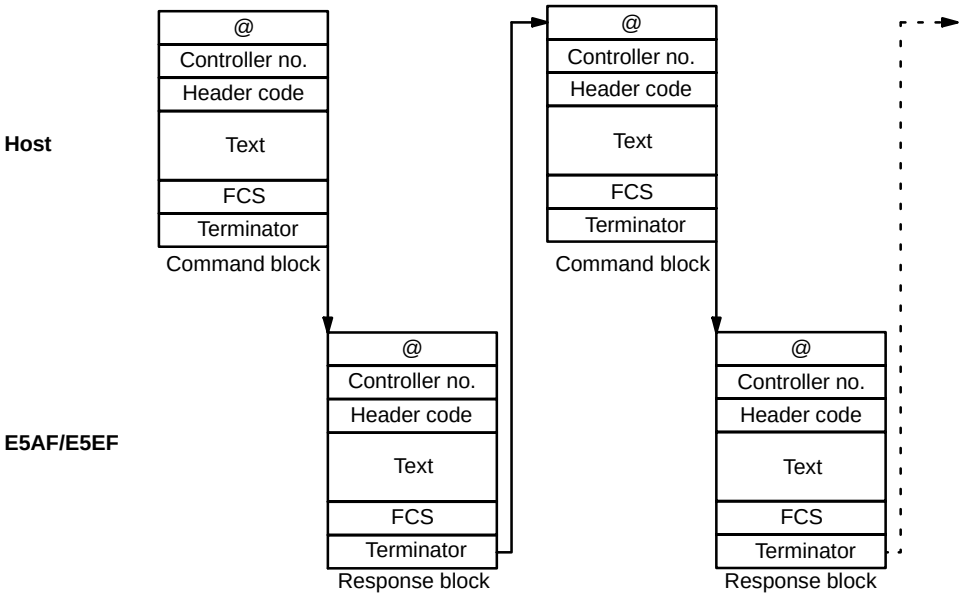

Controller numbers correspond to unit numbers in a PC system. When assigning Controller numbers for several Controllers, be sure to avoid duplication of the settings.

3–5–2 Blocks

The block transmitted from the host computer is referred to as a command block.

Blocks sent from the Temperature Controller are called response blocks.

One block begins with the start character “@” and communications address, and ends with the FCS and a terminator. Data characters are in ASCII.

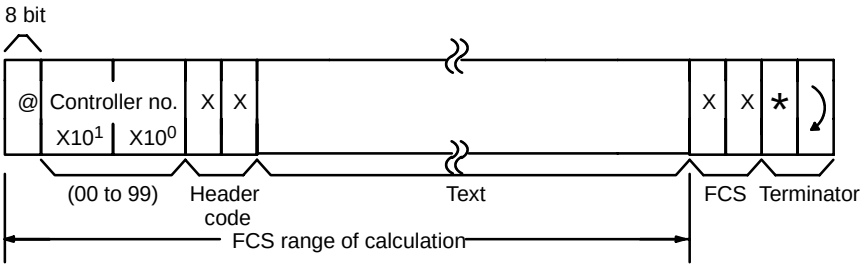

The FCS (frame check sequence) is formed by converting the 8-bit data obtained by taking the exclusive-OR of @ to the last text character into two ASCII characters. Be sure to attach the FCS to the end of the text.

FCS Calculation Example

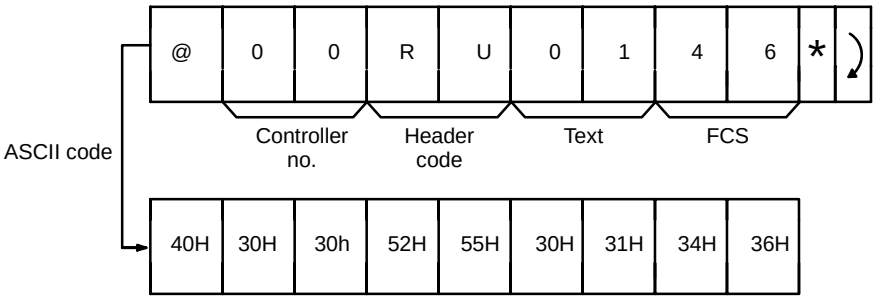

FCS = 40H (+) 30H (+) 30H (+) 52H (+) 55H (+) 30H (+) 31H = 46H
(Converted into ASCII code 34H + 36H)
(+) is exclusive-OR, H is hexadecimal code.

3–5–3 Error Control

E5AF/E5EF errors must be corrected at the host computer. The host computer controls the following error recovery procedures:

Errors in transmission can be detected in the following ways.

1. Character checks (check of each character)
   - Vertical parity check (even): This is an exclusive-OR check for each character.
   - Framing check: This detects the 0 bit in a stop bit and determines it to be an error.
   - Overrun check. Overrun occurs when the next character is received while the current character is being processed.
2. Block checks (check of each block)
   - Format check: Command format structure is checked.
   - Register data check: The range of values such as the channel numbers or set value is checked.

- FCS: Exclusive-OR from @ to the last character in the text.

3–5–4 Precautions

When reading or writing various types of numeric data, take decimal positions into account. All data is expressed in four digits.

It is necessary to take decimals into account in the following cases:

- Proportional band
- Output value
- Main setting, alarm value, process temperature, and set limit value when Pt 100W is selected.
- Fuzzy scale 1 and fuzzy scale 2.
- Heater burnout alarm value and heater current value for the E5AF/E5EF-AH_ and E5EF-BAH.

Example 1: When a Pt 100W is selected as an input and the main setting is 20%C, the data becomes 0200.

Example 2: A main setting of −15%C is expressed as F015. When a Pt 100W is selected as input, a main setting of −10.5%C is expressed as F105.

After sending a command, a response is returned. Check the contents of the response and process it on the host computer.

The system cannot operate when the E5AF detects overflow, underflow, or A/D error. Write a program which checks the status data.

When a communications input is executed in ordinary BASIC, the computer waits for an input and cannot operate without it. Write a program which can confirm that communications are not taking place when, for example, the E5AF is not powered up.

When errors are suspected to have been caused by noise, try executing communications repeatedly (approximately 10 times) until the E5AF/E5EF returns to the normal operating condition.

3–6 Header Codes

The following table shows the header codes for each Model. The codes are accompanied by their function names. The table also indicate whether each of the functions can be operated in the Remote mode and the Local mode. For further details, check the reference section in the last column.

Header code	Name	Remote mode	Local mode	Remarks	Reference section
ME MA	Backup mode RAM write mode selection	Yes	–––	(See Note 1)	3–7
MW	RAM data all save	Yes	–––	(See Note 1)	3–8
MB	Remote/Local mode select	Yes	Yes	(See Note 3)	3–9
WS W% WI WB WN WV	Main setting write Alarm temperature write Input shift value write Proportional band write Integral time write Derivative time write	Yes	–––	(See Note 1)	3–10
WW	Heater burnout alarm temperature write	Yes	–––	(See Note 1 and 2)	3–10
Wj	Fuzzy strength write	Yes	–––	(See Note 1)	3–10
Wk	Fuzzy scale 1 write	Yes	–––		3–10
W*l*	Fuzzy scale 2 write	Yes	–––		3–10
RS R% RI RB RN RV RO	Main setting read Alarm temperature read Input shift value read Proportional band read Integral time read Derivative time read Output value read	Yes	Yes	–––	3–11
RW	Heater burnout alarm temperature read	Yes	Yes	(See Note 2)	3–11
Rj	Fuzzy strength read	Yes	Yes	–––	3–11
Rk	Fuzzy scale 1 read	Yes	Yes		3–11
R*l*	Fuzzy scale 2 read	Yes	Yes		3–11
RL	Setting limit read	Yes	Yes	–––	3–12
RX	Process temperature read	Yes	Yes	–––	3–13
RZ	Heater current read	Yes	Yes	(See Note 2)	3–14
RU	Initial status read	Yes	Yes	–––	3–15
AS	Auto-tuning start	Yes	–––	–––	3–16
AP	Auto-tuning stop	Yes	–––	–––	3–17
IC	Undefined error	Yes	Yes	Response to an undefined header code.	3–18

Note 1. Write commands are not valid in the local mode or during auto-tuning. If attempted, an end code “0D” (command cannot be executed) reply will be received.

2. These header codes are available when using the E5AF/E5EF-AH_ and E5EF-BAH.

3. This header code is available when using the E5EF-AH_ and E5EF-BAH.

3–7 Selection of Write Modes

The set value data sent from the computer or the sequencer is internally stored in the E5AF/E5EF, which has a non-volatile memory and a RAM. The set value is stored in the non-volatile memory even when power is turned off. The RAM, however, should be used instead of the non-volatile memory if the set value must be changed frequently while operating the E5AF/E5EF.

The E5AF/E5EF has two kinds of write modes (backup mode and RAM write mode), either of which can be chosen for data storage.

When power is turned on, the E5AF/E5EF enters its backup mode automatically. Changing the mode is possible with communications commands only. The selection of write modes are explained as follows:

Backup Mode

In the Backup mode, all set values are stored in the non-volatile memory and the RAM. This mode should not be selected if the value you set must be changed frequently (more than a few times a day in single value control operation, for example) while operating the E5AF/E5EF.

The E5AF/E5EF automatically enters its Backup mode each time power is ON. The non-volatile memory stores data when E5AF/E5EF is in local mode.

The following block diagram shows the condition of data storage for both Backup mode and Local mode:

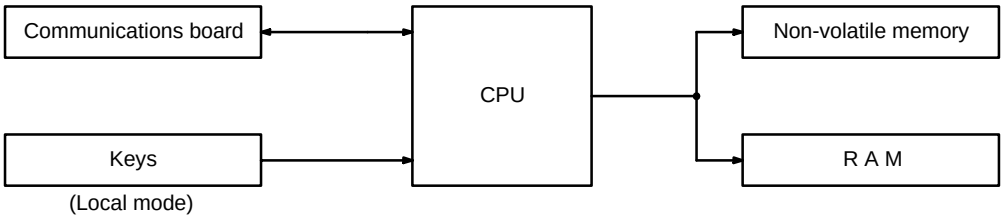

RAM Write Mode

In the RAM write mode, all set values are stored in the RAM while power is on. This mode should be selected if the value you set must be changed frequently (in program control operation, for example). Any set value stored in the RAM is lost when the power is turned off. Any set value written in this mode will not be backed up. Use the RAM data all save function to store it.

The following block diagram shows data storage in the RAM write mode.

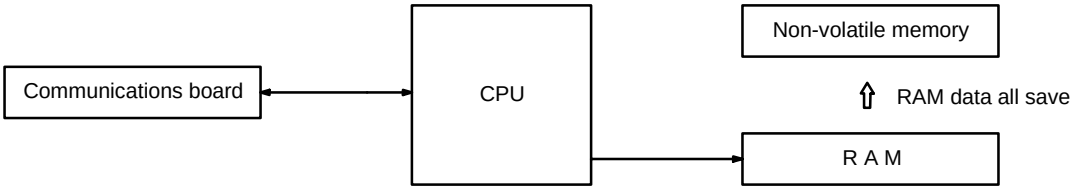

Relationship between Write Mode Switching and Remote/Local Modes

Switching from the Remote mode to the Local mode or vice versa does not affect the write mode that has been already set. Any values that have been set are automatically stored in the non-volatile memory when the mode is switched from the Remote mode to the Local mode. In the Local mode, values are stored in the non-volatile memory regardless of the write mode that has been selected.

Command Format

ME: Backup mode
MA: RAM write mode
Channel no.: 01

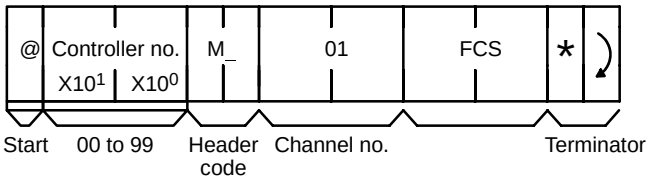

Response Format

If the end code is 00, operation was normal. If the end code is other than 00, the command was not processed.

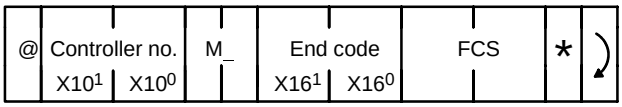

Note For the end code list, refer to *3–19 End Code List*.

3–8 RAM Data All Save

If the RAM data all save is executed, the contents of the RAM is transferred to the non-volatile memory. Any set value written in the RAM write mode is lost when power is turned off. To avoid this, execute the RAM data all save. There will be a response delay after this command is executed since the transfer will take approximately 0.5 s.

Command Format

Channel no.: 01

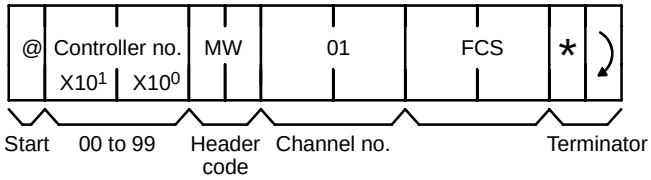

Response Format

If the end code is 00, operation was normal. If the end code is other than 00, the command was not processed.

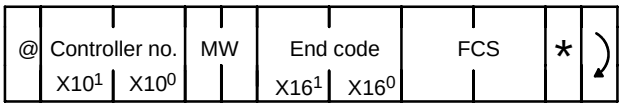

3–9 Remote/Local Mode Selection

Select Remote or Local mode.

Command Format

Set value 0000: Remote mode
Set value 0001: Local mode
Channel no.: 01

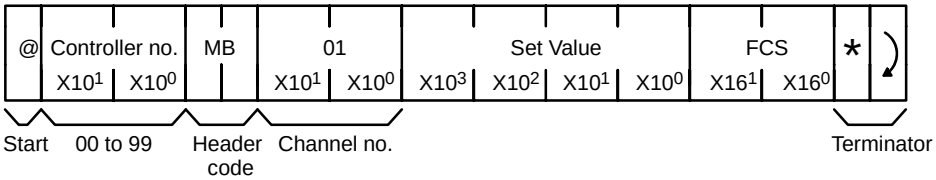

Response Format

If the end code is 00, operation was normal. If the end code is other than 00, the command was not processed.

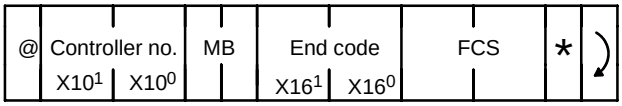

3–10 Set Value Write

For main setting, alarm value, proportional band, integral time, derivative time, cooling coefficient, dead band, input shift value, heater burnout alarm value, fuzzy strength, fuzzy scale 1, fuzzy scale 2.

Command Format

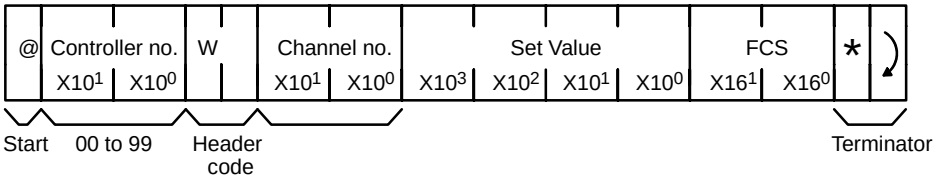

Note
1. Decimals must be taken into account for writing some types of data.
2. For negative data values, x10^3 becomes “F” (e.g. −35℅C = F035).
3. The channel number can be set to either 01 or 02. When setting alarm output 2 for the E5AF-A, use the channel number 02. For all other settings, use channel number 01, or end code 15 will be returned.
4. The Controller number (00 to 99) must be a decimal code that allows the host computer to distinguish an E5AF Model from the other E5AF Models in the same system when communicating (via RS-422 or RS-485). Do not give identical Controller numbers to Fuzzy Temperature Controllers in the same system as this will interfere with communications.

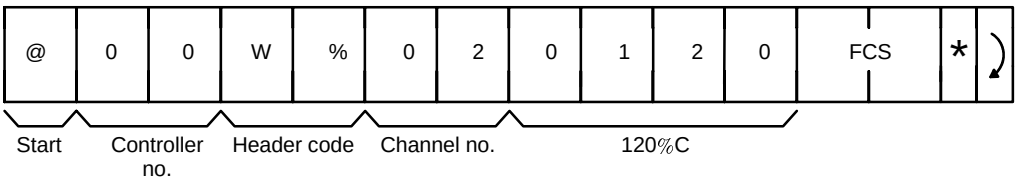

Response Format

If the end code is 00, operation was normal. If the end code is other than 00, the command was not processed.

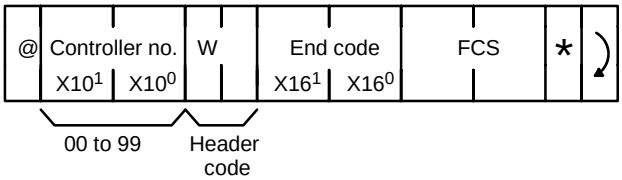

Note For the end code list, refer to page *3–19 End Code List*.

3–11 Set Value Read

For main setting, alarm value, proportional band, integral time, derivative time, cooling coefficient, dead band, input shift value, heater burnout alarm value, fuzzy strength, fuzzy scale 1, fuzzy scale 2.

Command Format

For Channel no. settings, refer to *3–10 Set Value Write*.

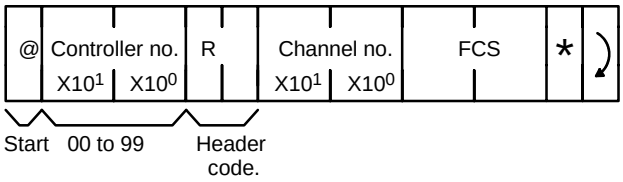

Response Format

If the end code is 00, operation was normal. If the end code is other than 00, the command was not processed.

For negative data values, $x10^3$ becomes F (e.g. –35%C = F035). The output value is processed down to the first decimal place (e.g. 0567 = 56.7%). For details refer to *3–16 Auto-tuning Start*.

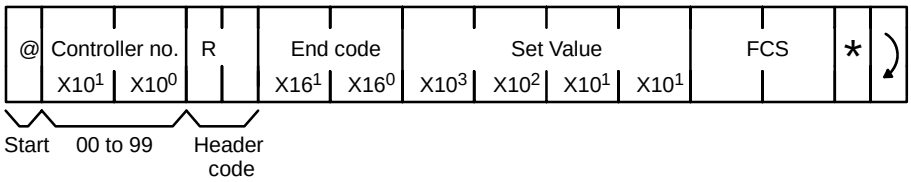

3–12 Set Limit Read

The upper or lower limit of the set value can be read. If a temperature exceeding the range of the set limit is written, end code 15 (register error) will result. Use the Setting Limits command to check the setting range.

Command Format

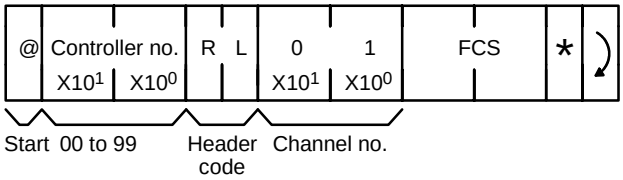

Response Format

For negative data values, $x10^3$ becomes F (e.g. –35%C = F035).

Any data read will not include decimals. Refer to the following examples:
For a Pt 100W input (–99.9% to 450.0%C), the lower limit is F999 and the upper limit is 4500.
For a K thermocouple input (–200 to 1,300%C), the lower limit is F200 and the upper limit is 1300.

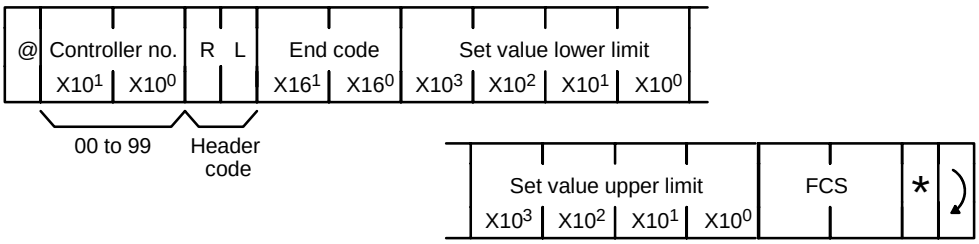

3–13 Process Temperature Read

This command is used to read the process temperature and status data.

Command Format

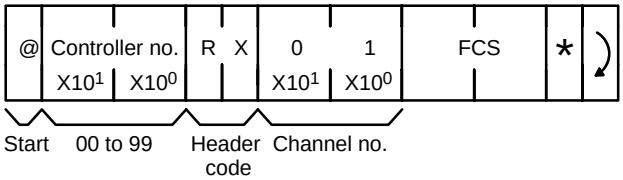

Response Format

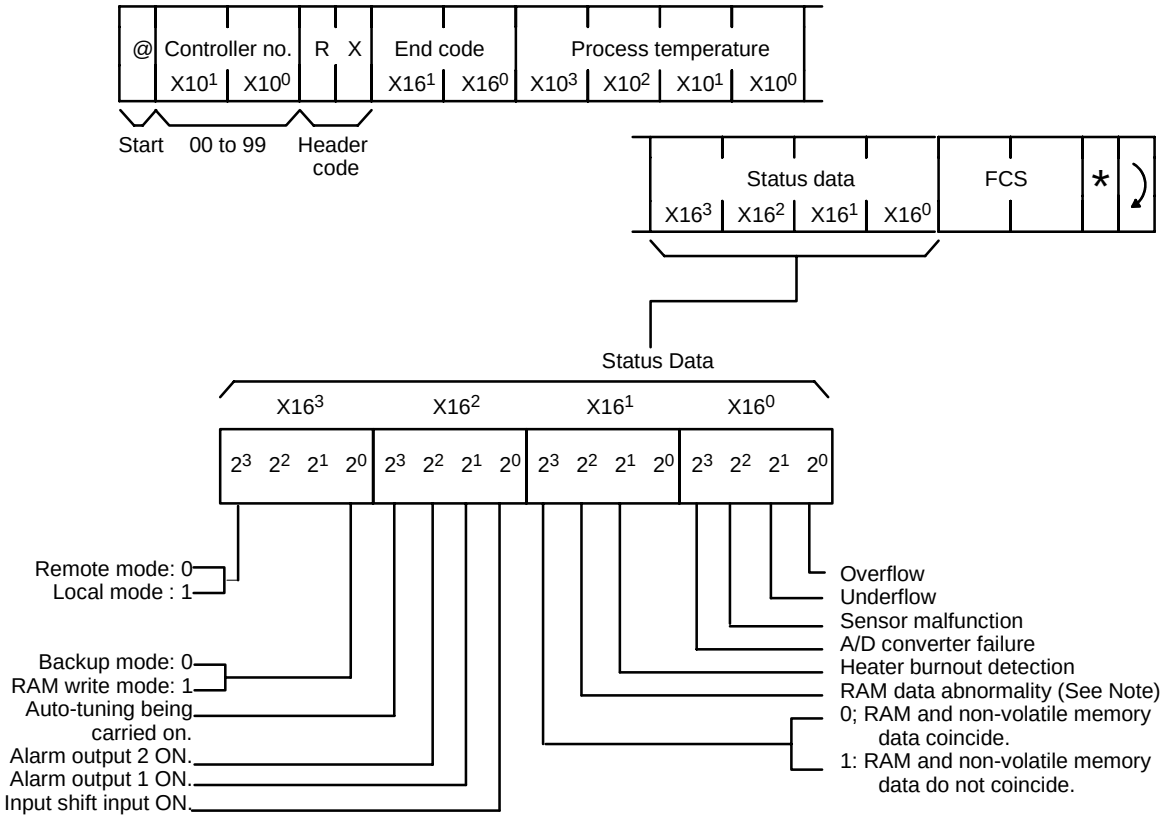

As the status data, the corresponding bits are set. For example, when alarm output 1 is ON, the status data is 0200 (ASCII code - 30H, 32H, 30H, 30H).

For negative data values, $x10^3$ becomes F (e.g. –35℅C = F035).

An A/D error requires E5AF/E5EF inspection.

When the E5AF/E5EF is underflowing, the process temperature will be the lower limit value of the maximum input range. During overflowing or with sensor error, the process temperature will be the upper limit value of the maximum input range. Check the status data for the proper operation of the E5AF/E5EF.

For the Heater Burnout Detection Models, alarm output 1 bit is used as the alarm bit. Alarm output 2 bit is for the detection of heater burnout and abnormal input.

For the Heater Burnout Models, the input shift bit is 0.

RAM Data Abnormality:

When a data error occurs while a set value is being written into the RAM, the RAM data will be void, and the data in the non-volatile memory will be transferred instead.

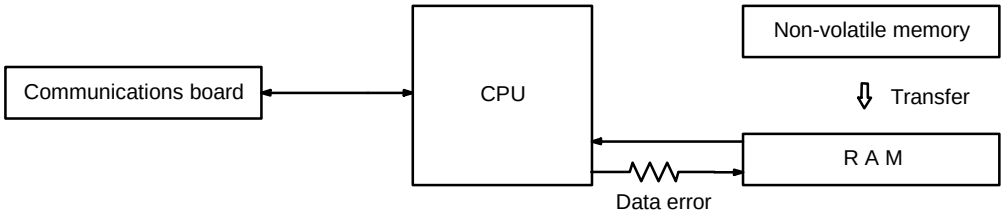

Simultaneously, the status data will have the RAM data abnormality flag. Check the error referring to the following examples and take necessary counter-measures:

Example 1: Always check if the status data has the RAM data abnormality flag. The RAM data abnormality flag in the status data means that an abnormality has occurred. The flag will be reset after it is read.

Example 2: Always monitor the set values. Any value different from the one that has been written means that abnormality has occurred.

3–14 Heater Current Value Read

The CT input value and status data can be read.

Command Format

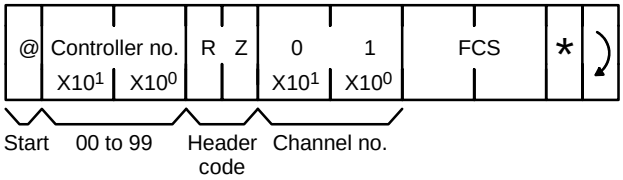

Use Channel number 01, or end code 15 (data error) will be returned.

Response Format

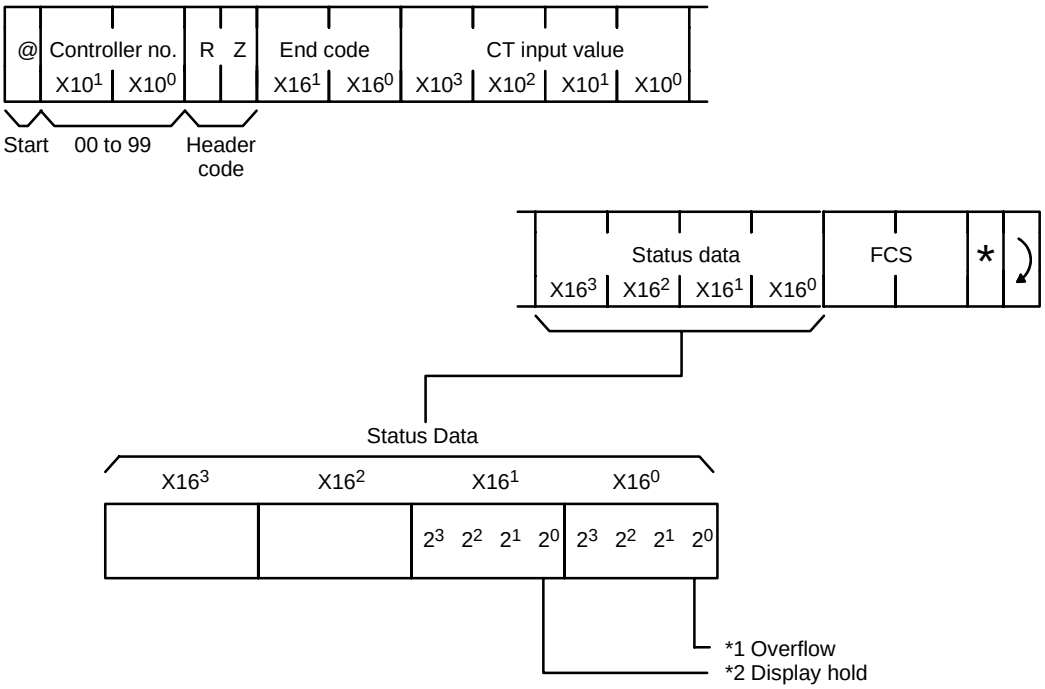

*1: If the heater current exceeds 50.0 A, 1 will be set, at which time 50.0 will be read as an heater current value.
*2: If the control output is ON for less than 200 ms, 1 will be set and the present value will be maintained as a heater current value.

3–15 Initial Status Read

This command is used to check the initial status of the internal settings of the E5AF/E5EF.

Command Format

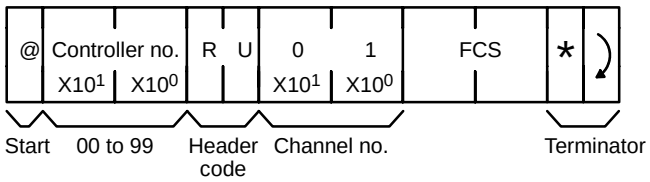

Response Format

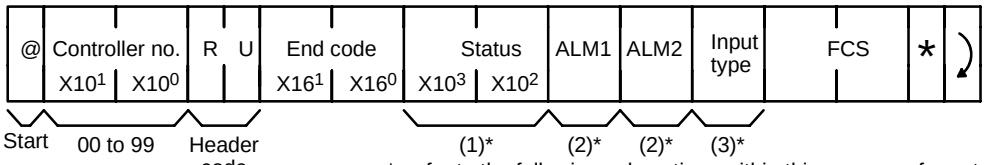

*: refer to the following subsections within this response format section.

(1) Status Data

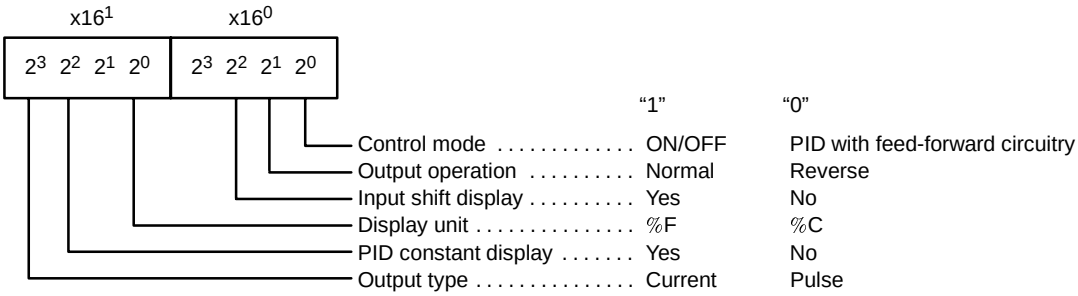

(2) Alarm Mode

$x16^0$	Name
0	No alarm function
1	Upper/lower limit alarm
2	Upper limit alarm
3	Lower limit alarm
4	Upper/lower limit range alarm
5	Upper/lower limit alarm with stand-by sequence
6	Upper limit alarm with stand-by sequence
7	Lower limit alarm with stand-by sequence
8	Absolute value alarm
9	Proportional alarm (See Note)

Note The proportional alarm mode is not available for alarm output 2 of the E5AF/E5EF-A_ and E5EF-BA. Alarm output 1 of the E5AF/E5EF-AH_ and E5EF-BAH has alarm data. Alarm output 2 of the Models do not have an alarm function.

(3)

Input Type (E5AF)

No.	Type
0	R
1	S
2	K
3	J
4	T
5	E
6	JPt100
7	Pt100
8	L
9	U

Thermocouple Type (E5EF)

No.	Type
0	R
1	S
2	K
3	J
4	T
5	E
6	B
7	N
8	L
9	U

Platinum Resistance Thermometer Type

No.	Type
0	JPt100
2	Pt100

3–16 Auto-tuning Start

Command Format

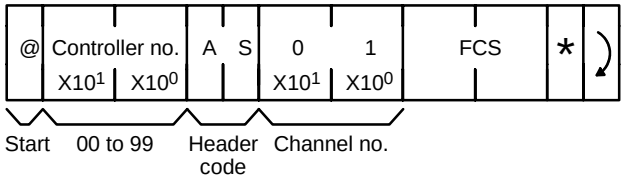

Note 1. If this command is sent during auto-tuning, an end code “0D” (command cannot be executed) will be returned.

2. To check the execution, completion, or interruption of auto-tuning, use the response block status data that corresponds to the process temperature reading.

3. To restart auto-tuning while auto-tuning is in progress, stop it once and then restart.
4. With ON/OFF control (function selector SW201 is ON), auto-tuning cannot be executed.

Response Format

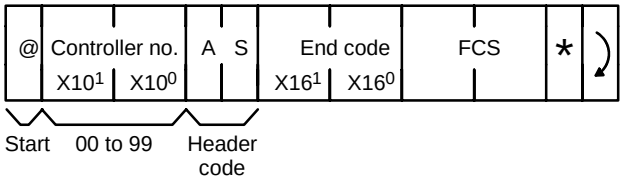

3–17 Auto-tuning Stop

Command Format

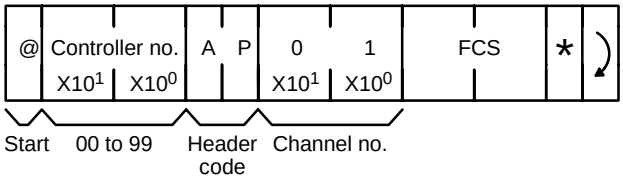

Note When auto-tuning is interrupted, the setting data becomes that before the start of auto-tuning.

Response Format

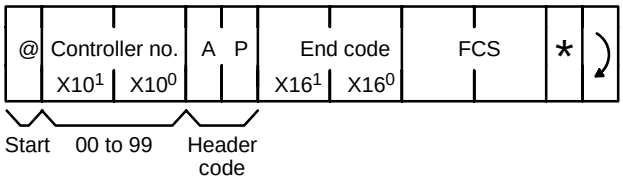

3–18 Undefined Error

The response when the header code of the command cannot be read.

Response Format

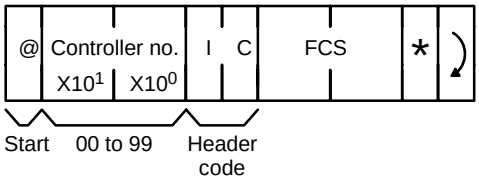

3–19 End Code List

End code		Contents
x 16^1	x 16^0	
0	0	Normal ending (when there is no error in the command block sent from the host computer)
0	1	–––
0	2	–––
0	3	–––
0	4	–––
0	B	–––
0	C	–––
0	D	Command cannot be executed
1	0	Parity error (even)
1	1	Framing error
1	2	Overrun error
1	3	FCS error
1	4	Format error
1	5	Data error
1	6	–––
1	8	–––
1	9	–––
2	1	Non-volatile memory write error (see note)

Note This end code is available when using the E5EF.

Error Criteria

End code	Contents	Condition
0D	Local mode	When a write command is sent while the Fuzzy Temperature Controller is in its local mode or performing auot-tuning.
10	Parity error (even)	When the sum of “1” bits in the received data do not agree with the even or odd parity that has been set.
11	Framing error	When the stop bit is 0.
12	Overrun error	When the receive data register is full and new receive data is transferred to it.
13	FCS error	When the FCS shows disagreement.
14	Format error	When the total length of the command is incorrect.
15	Data error	When there is a setting error in write data. When a Channel number is invalid. When the write data is not acknowledged as numeric values.

Order of Priority

E5AF:
Wrong Controller number > Undefined > Local mode > Parity > Framing > Overrun > FSC error > Format > Register data

E5EF:
Undefined > Command execution impossible > Parity > Framing > Overrun > Format > FCS error > Non-volatile memory > Data

3–20 Communications Time

Due to transmission speeds and E5AF's internal processing, there will be a time delay in RS-232C, RS-422, or RS-485 communications as follows:

Example 1: Writing the Main Setting

Setting 500%C to Channel no. 01, Controller no. 00.

Command Format:

@00WS010500 (FCS 2 digits) *↵ 15 bytes.
Since the configuration of start-stop sync data requires 11 bits to 1 byte, 11 bits x 15 bytes = 165 bits. Therefore, when communicating at 1,200 bps, 165/1,200 bps = approx. 0.2 s.

Internal Processing Time: 0.5 s max.

Operating Cycle: 0.5 s max.

The time from the start of communications to the start of the resulting operation is therefore a maximum of 1.2 s (0.2 + 0.5 + 0.5).

Example 2: Reading the Process Temperature

Reading the temperature of Controller 00.

Command Format:

@00RX01(FCS 2 digits) *↵ 11 bytes.
11 bits x 11 bytes = 121 bits.

Response Format:

@00RX000500(status data 4 digits)(FCS 2 digits) *↵ 19 bytes (present value: 500%C).
11 bits x 19 bytes = 209 bits. Therefore, when communicating at 1,200 bps, (121 + 209 bits)/1,200 bps = approx. 0.3 s. However, no more than 0.8 s is required between the time the command is sent and the response is output.

Internal Processing Time: 0.5 s max.

Operating Cycle: 0.5 s max.

The time from the communications start to the process temperature read is approx. 0.5 s. Thus the temperature displayed is actually no more than a maximum of 0.7 s (0.2 + 0.5) previous to the time of reading.

3–21 Communications Program Example

3–21–1 Program Example of RS-232C/RS-422/RS-485 Communications

Input the data to be transmitted from the start character “@” to the last character of text data. After data input, FCS is calculated and transmitted with a terminator. If this program is not executed correctly, there is an error in the transmission section; check the connection of communications cables.

```
1000 '*****************************************************
1010 '*   PROGRAM    : E5AF-__ communications for PC-9801 *
1020 '*   VERSION    : 2.01                               *
1030 '*   Copyright (C) 1990 OMRON Corporation            *
1040 '*****************************************************
1050 '***********************************************
1060 '*   <Main processing>                         *
1070 '***********************************************
1080 *MAIN
1090 GOSUB *INIT                    '<Initial setting>
1100 GOSUB *MDAT                    '<Transmission data formation>
1110 GOSUB *COMM                    '<Communication execution>
1120 GOSUB *DISP                    '<Display processing>
1130 GOSUB *QUIT                    '<End processing>
1140 END                            'End
1150 '***********************************************
1160 '*   <Initial setting>                         *
1170 '***********************************************
1180 *INIT
1190 CLS                            'Clear screen
1200 TIM=1000                       'Reception wait time setting
1210 LMT=10                         'Retry frequency setting
1220 DIM NGM$(LMT-1)                'NG data storage in memory
1230 PRE$="@00RU01"                 'Default command
1240 TRM$="*"+CHR$(13)              'Terminator definition
1250 NG1$="NO RESPONSE"             'NG data definition
1260 NG2$="END CODE:"               '
1270 NG3$="FCS ERROR "              '
1280 OPEN "COM:E73"AS #1            'Set communications port
1290 RETURN
1300 '***********************************************
1310 '*  <Transmission data formation>              *
1320 '***********************************************
1330 *MDAT
1340 INPUT "SEND DATA : ",SEND$     'Send command input
```

```
1350 IF SEND$="" THEN SEND$=PRE$    'Transmission command determination
1360 DUMY$=SEND$                    '
1370 GOSUB *FCS                     'FCS calculation
1380 SEND$=SEND$+FCS$+TRM$          '<Transmission data formation>
1390 RETURN
1400 '***********************************************
1410 '*  <Communication execution>                  *
1420 '***********************************************
1430 *COMM
1440 NG=0                           'Clear retry and counter
1450 *RETRY                         '
1460 CNT=0                          'Clear reception wait time
1470 REC=0                          'Clear reception end flag
1480 RESP$=""                       'Clear reception data
1490 PRINT #1,SEND$:                'Data transmission
1500 WHILE (CNT<TIM AND REC=0)      '(Waiting for reception)
1510 IF LOC(1)=0 THEN *SKIP         'Received data presence/absence judgment
1520 DUMY$=INPUT$(LOC(1),#1)        'Received data acceptance
1530 RESP$=RESP$+DUMY$              '
1540 CHK$=RIGHT$(RESP$,2)           'Terminator check
1550 IF CHK$=TRM$ THEN REC=1        '
1560 *SKIP                          '
1570 CNT=CNT+1                      'Reception wait time progression
1580 WEND                           '
1590 GOSUB *RESP.CHK                'Response check
1600 IF CHK<>0 THEN RETRY           'Retry execution
1610 RETURN
1620 '***********************************************
1630 '*  <Display processing>                       *
1640 '***********************************************
1650 *DISP
1660 PRINT "RESPONSE  : ";RESP$     'Received data display
1670 IF NG=0 THEN *DISP.END         'NG data display
1680 FOR I=1 TO NG                  '
1690 PRINT "TRY";I;"=> ";NGM$(I-1)  '
1700 NEXT                           '
1710 *DISP.END                      '
1720 RETURN
1730 '***********************************************
1740 '*  <End processing>                           *
1750 '***********************************************
```

```
1760 *QUIT
1770 CLOSE #1                        Close communications port
1780 RETURN
1790 '***********************************************
1800 '*  <FCS calculation>                          *
1810 '***********************************************
1820 *FCS
1830 FCS=0                           'Clear FCS
1840 FOR I=1 TO LEN(DUMY$)           '
1850 FCS=FCS XOR ASC(MID$(DUMY$,I,1) '
1860 NEXT                            '
1870 FCS$=RIGHT$("0"+HEX$(FCS),2)    'FCS HEX conversion
1880 RETURN
1890 '***********************************************
1900 '*  <Response check>                           *
1910 '***********************************************
1920 *RESP.CHK
1930 CHK=1                           'If no response is received
1940 IF REC=0 THEN *RESP.ER          'CHK = 1
1950 CDE$=MID$(RESP$,6,2)            '
1960 CHK=2                           'If ending is abnormal
1970 IF CDE$<>"00" THEN *RESP.ER     'CHK = 2
1980 CHK=0                           '
1990 GOSUB *FCS.CHK                  'FCS check
2000 IF CHK=0 THEN *CHK.END          'Normal end
2010 *RESP.ER                        '
2020 IF CHK=1 THEN NGM$(NG)=NG1$     'NG data storage
2030 IF CHK=2 THEN NGM$(NG)=NG2$+CDE$ '
2040 IF CHK=3 THEN NGM$(NG)=NG3$     '
2050 NG=NG+1                         'NG frequency progression
2060 IF NG=LMT THEN CHK=0            'If NG frequency exceeds the set retry
                                     frequency, then retry CHK = 0
2070 *CHK.END                        '
2080 RETURN
2090 '***********************************************
2100 '*  <FCS check>                                *
2110 '***********************************************
2120 *FCS.CHK
2130 LENGTH=LEN(RESP$)-4             'Obtain range of calculation
2140 DUMY$=LEFT$(RESP$,LENGTH)       '
2150 GOSUB *FCS                      'FCS calculation
```

```
2160 RECFCS$=MID$(RESP$,LENGTH+1,2) When FCS error occurs
2170 IF FCS$<>RECFCS$ THEN CHK=3    'CHK = 3
2180 RETURN
```

3–21–2 Operation Example

The following is an execution example of the previous program:

Bold characters represents operation and the carriage return symbol ↵ represents the RETURN key. This program cannot execute transmission normally unless the initial transmission settings of the personal computer are: even parity, 7 bits, 2 stop bits, and the same baud rate as the E5AF. If the connectors are not properly connected, the program may stop halfway.

The host computer is a PC-9801.

RUN ↵
SEND DATA : ↵
RESPONSE : @00RU000000077 *

(If only the RETURN key is pressed when inputting data,

the RU command is transmitted to Controller no. 00.)

RUN ↵
SEND DATA : @**00RX01** ↵
RESPONSE : @00RX000085000047 *

(The process temperature of Controller no. 00 is read.)

RUN ↵
SEND DATA : @**00WS011234** ↵
RESPONSE : @00WS0044 *

(1234 is written as the set value for Controller no. 00.)

RUN ↵
SEND DATA : @**00RS01** ↵
RESPONSE : @00RS00123445 *

(The main setting of Controller no. 00 is read.)

RUN ↵
SEND DATA : @**00AS01** ↵
RESPONSE : @00AS0D26 * (Final Response)
TRY 1=>NO RESPONSE
TRY 2=>FCS ERROR
TRY 10=>END CODE:0D (Data Error)

The meaning of response is as follows:

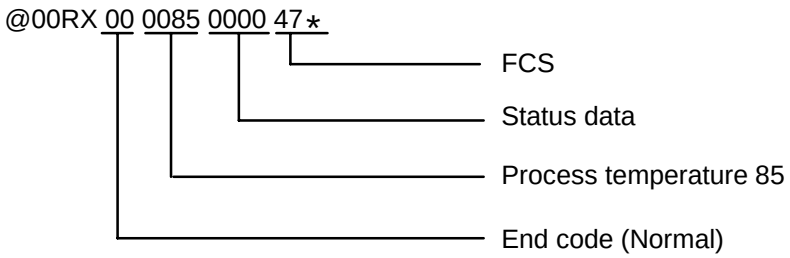

SECTION 4
BCD Models

This section provides the basic operational elements required in order to use the BCD Output Models. Included in this section are two examples of E5AF use.

4–1 Communications Connectors 42
4–1–1 Connection of E5AF-A20 and PC 42
4–1–2 Terminals 43
4–2 Setting Before Power Application 44
4–3 Operations: Front Key Section 44
4–4 Important Notes on Communications Programming 44
4–4–1 Things to Remember 44
4–4–2 Communications Error 44
4–5 Data Select Code 45
4–6 Timing Chart 48
4–6–1 Writing 48
4–6–2 Reading 49
4–7 E5AF-A20: Application Example #1 49
4–7–1 I/O Allocation 49
4–7–2 Program 1: Exclusive Read Program 51
4–7–3 Program 2: Exclusive Write Program 53
4–7–4 Program 3: Combination of Program 1 and Program 2 55
4–8 E5AF-A20: Application Example #2 58
4–8–1 Hardware Configuration 58
4–8–2 PC Program Example 59
4–8–3 I/O Relay List 63
4–8–4 Timer and Counter List 64
4–8–5 Counter Operation Timing Chart 65

4–1 Communications Connectors

4–1–1 Connection of E5AF-A20 and PC

The E5AF Fuzzy Temperature Controller with BCD communications can be directly connected to a PC (Programmable Controller) or a personal computer.

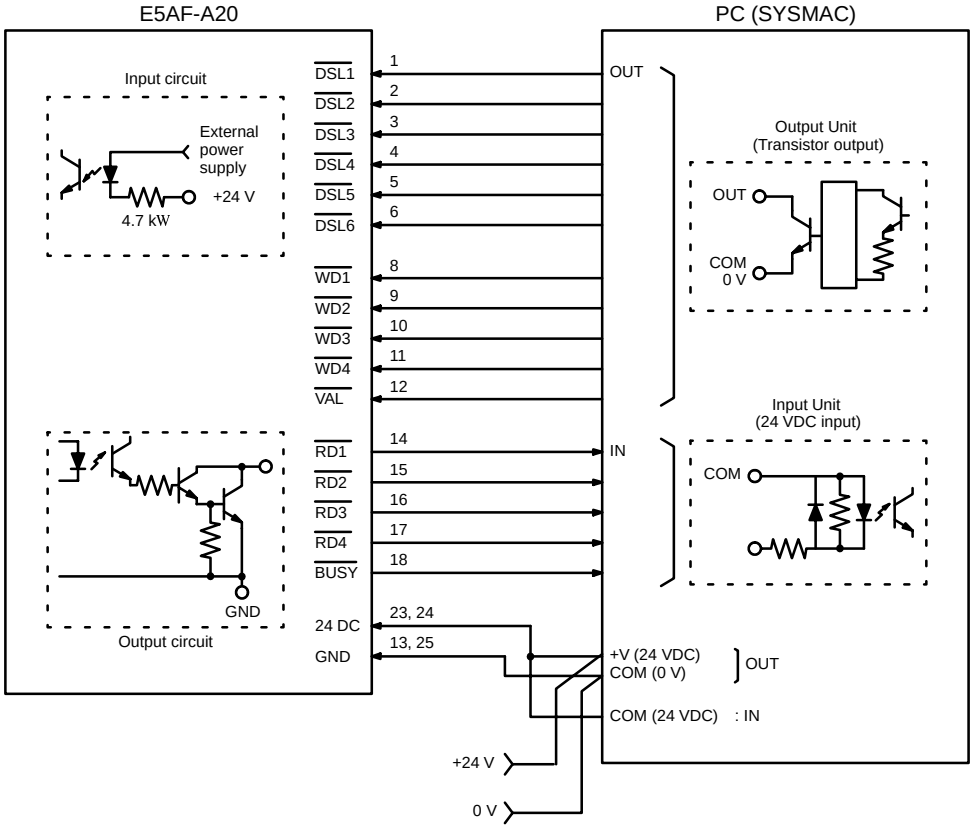

Note The communications specifications of the E5AF-A20 and those of the E5AX-A20 are identical.

Operation

Communications are possible as long as the $\overline{\text{VAL}}$ signal from the SYSMAC PC is ON (low).

When a data select code ($\overline{\text{DSL1}}$ to $\overline{\text{DSL6}}$) is input from the PC to the E5AF-A20, the E5AF-A20 either reads data from lines $\overline{\text{WD1}}$ through $\overline{\text{WD4}}$ or writes data to lines $\overline{\text{RD1}}$ through $\overline{\text{RD4}}$ according to the data select code.

Note
1. Use the communications connector on the back of the E5AF to connect the PC and the E5AF-20.
2. To communicate between one PC and several E5AF-A20 Models, use a wired OR to connect each signal terminal other than the $\overline{\text{VAL}}$ terminal, and select the Controller to communicate with using independent $\overline{\text{VAL}}$ signal lines.

Terminals

Input/output signal name		Voltage	Current	Impedance	Remarks
Input	$\overline{\text{DSL1}}$ to $\overline{\text{DSL6}}$ $\overline{\text{WD1}}$ to $\overline{\text{WD4}}$ $\overline{\text{VAL}}$	24 VDC	5.1 mA	4.7 kW	–––
Output	$\overline{\text{RD1}}$ to $\overline{\text{RD4}}$ $\overline{\text{BUSY}}$	24 VDC	5 to 15 mA	–––	Open collector

4–1–2 Terminals

E5AF-A20 terminal identifications and functions are shown below.

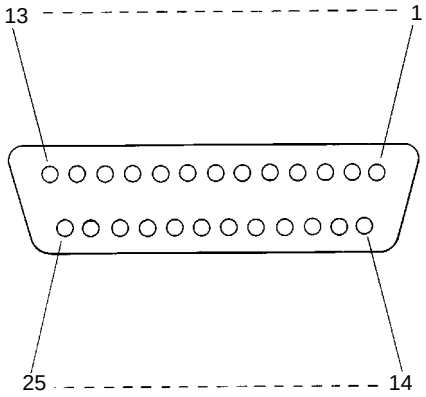

Terminal no.	Signal name	Signal direction	Description
1	DSL1	Input	Data select code 2^0
2	DSL2	Input	Data select code 2^1
3	DSL3	Input	Data select code 2^2
4	DSL4	Input	Data select code 2^3
5	DSL5	Input	Data select code 2^4
6	DSL6	Input	Data select code 2^5
7	---	---	---
8	WD1	Input	Write data 2^0
9	WD2	Input	Write data 2^1
10	WD3	Input	Write data 2^2
11	WD4	Input	Write data 2^3
12	$\overline{\text{VAL}}$	Input	Effective signal
13	GND	---	Output side power supply 0 V
14	RD1	Output	Read data 2^0
15	RD2	Output	Read data 2^1
16	RD3	Output	Read data 2^2
17	RD4	Output	Read data 2^3
18	$\overline{\text{BUSY}}$	Output	BUSY signal
19	---	---	---
20	---	---	---
21	---	---	---
22	---	---	---
23	24 VDC	---	24 VDC output side power supply (must be supplied from an external power supply)
24	24 VDC	---	24 VDC output side power supply (common with terminal 23)
25	GND	---	24 VDC output side power supply (common with terminal 13)

Connectors

Plug: XM4A-2521 (OMRON) or equivalent.
Hood: XM2S-2511 (OMRON) or equivalent.

4–2 Setting Before Power Application

Make all the proper switch settings as described in *3–2 Before Applying Power* before applying power to the E5AF. However, no terminator designation is necessary.

4–3 Operations: Front Key Section

There is no need to set a baud rate or other communications parameters with the operating keys of E5AF-_20 (BCD) Controllers. For additional information about the operation, refer to the operating procedures in the datasheet.

4–4 Communications Programming

4–4–1 Things to Remember

1, 2, 3...

1. Process values and set values must be read and written in units of four digits. If all four digits are not written/read, no data will be written or the E5AF will continue displaying the previous data even after reading starts.
2. The read data is renewed in the following situations:

- On the falling edge of the $\overline{\text{VAL}}$ signal.
- When a new data select code is set.
- After the four digits of the present data is read, but before reading the next set of data.

3. Data can be received when the $\overline{\text{VAL}}$ signal is low.
4. Data is read after the rising edge of the $\overline{\text{BUSY}}$ signal.
5. When writing, set the write data and then change the select code.
6. The select code is read on the falling edge of the $\overline{\text{BUSY}}$ signal. Do not change the select code while the $\overline{\text{BUSY}}$ signal is high.
7. Once the select code has been changed, do not change it again until after the falling edge of the next $\overline{\text{BUSY}}$ signal.
8. If the $\overline{\text{VAL}}$ signal goes high while the $\overline{\text{BUSY}}$ signal is low (under process), select code processing may be interrupted. Do not change the $\overline{\text{VAL}}$ signal while the $\overline{\text{BUSY}}$ signal is high.
9. Wait at least 20 ms after the $\overline{\text{BUSY}}$ signal has gone high (OFF) before changing the $\overline{\text{VAL}}$ signal. VAL signal detection requires a maximum of 20 ms.
10. For negative values, write F as the leftmost digit (e.g. –23℅C = F023).
11. When several Controllers have been connected into a wired-OR data line, keep each $\overline{\text{VAL}}$ signal high for at least 20 ms.

4–4–2 Communications Errors

When an error occurs, it will not be displayed, but the BUSY signal will be output. A communications error will occur under the following conditions:

- When an undefined select code is sent.
- When improper four-digit writing data has been set.
- When read or write data cannot be set (refer to the note below).
- When a write command is received while the Controller is in local mode or is auto-tuning.

Note The Alarm Temperature (2) (AL2) for E5AF-AH_ cannot be set.

4–5 Data Select Code

Each of the following set values can be written or data can be read by designating the relevant data select code for the E5AF-_20 (BCD Models).

Code	Write		Code	Read	
00 01 02 03	Undefined		20 21 22 23	Process temperature	10^0 10^1 10^2 10^3
04 05 06 07	Set temperature (1)	10^0 10^1 10^2 10^3	24 25 26 27	Set temperature (1)	10^0 10^1 10^2 10^3
08 09 0A 0B	Undefined	10^0 10^1 10^2 10^3	28 29 2A 2B	Undefined	10^0 10^1 10^2 10^3
0C 0D 0E 0F	Alarm temperature (1) (See Note)	10^0 10^1 10^2 10^3	2C 2D 2E 2F	Alarm temperature (1) (See Note)	10^0 10^1 10^2 10^3
10 11 12 13	Alarm temperature (2)	10^0 10^1 10^2 10^3	30 31 32 33	Alarm temperature (2)	10^0 10^1 10^2 10^3
14 15	Undefined		34 35	Undefined	
16 17	Memory status Mode status		36 37	Memory status Mode status	
18 19 1A 1B	Undefined		38 39 3A 3B	Error code (1) Error code (2) Status (1) Status (2)	
1C 1D 1E 1F			3C 3D 3E 3F	Status (3) Alarm Type (1) Alarm Type (2) Sensor Type	

Note Alarm temperature (1) is effective for the E5AF-AH_.

Data Explanation

1. Memory and Mode Status

Each status explained below is for the write mode. For details, refer to *3–7 Selection of Write Modes*.

Memory Status
Data select code [16]

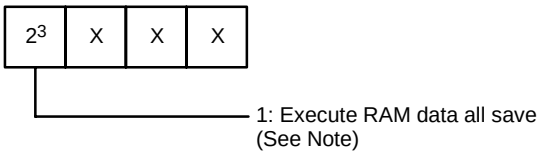

Note The $\overline{\text{BUSY}}$ signal will be delayed after this command is executed because data transfer will take up to 0.5 s.

Mode Status
Data select code [17]

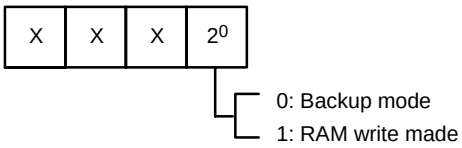

Memory Status
Data select code [36]

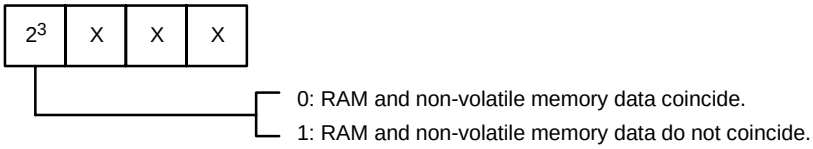

Mode Status
Data select code [37]

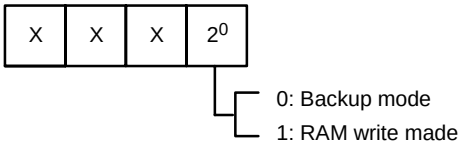

2. Error Code

Error Code (1)
Data select code [38]

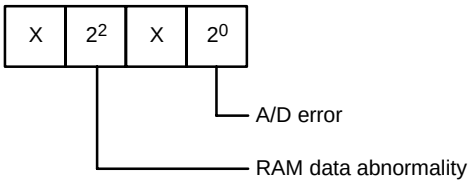

Error Code (2)
Data select code [39]

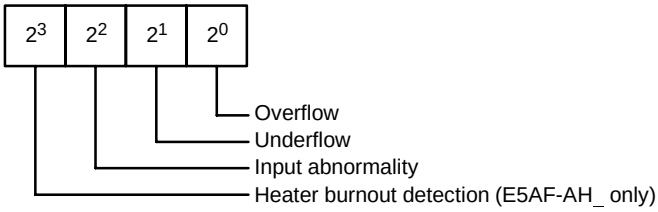

3. Status

Status (1)
Data select code [3A]

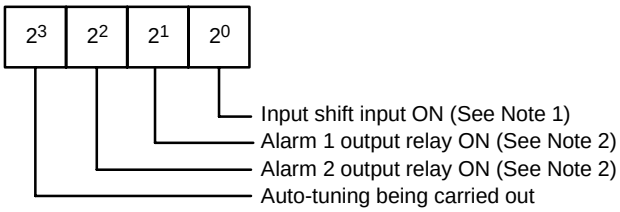

Note 1. The input shift bit of E5AF-AH_ will be 0.
2. Alarm output 1 bit of the E5AF-AH_ is the alarm bit. Alarm output 2 bit is for the detection of an abnormal input and heater burnout.

Status (2)
Data select code [3B]

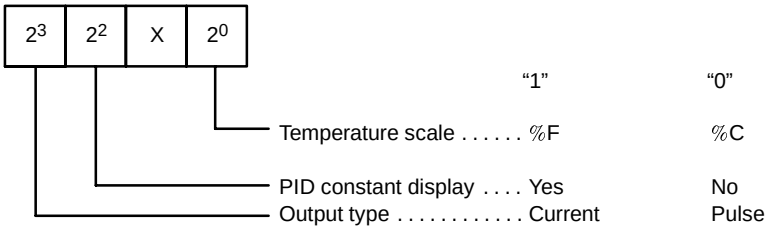

Status (3)
Data select code [3C]

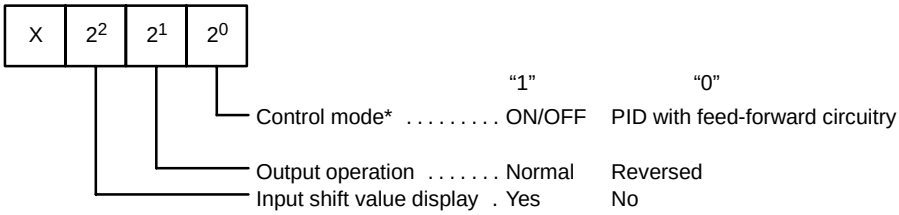

Alarm Model (1)
Data Select Code [3D]

For the E5AF-A_, this code indicates the Model of alarm output 1. The responses are shown in response 0 to 9 of Alarm Model (1).

Response	Model	Description
0	Alarm	No alarm
1		Upper/lower limit alarm
2		Upper limit alarm
3		Lower limit alarm
4		Upper/lower limit range alarm
5		Upper/lower limit alarm with stand-by sequence
6		Upper limit alarm with stand-by sequence
7		Lower limit alarm with stand-by sequence
8		Absolute value alarm
9		Proportional alarm

Alarm Model (2)
Data Select Code [3E]

For the E5AF-A_, this code indicates the Model of alarm output 2. The responses are shown in response 0 to 8 of Alarm Model (1).

Input Type
Data select code [3F]
With this data select code, the following table is applicable.

Response	Model
0	R
1	S
2	K
3	J
4	T
5	E
6	JPt100
7	Pt100
8	L
9	U

4–6 Timing Chart

The following charts show the timing of the signals when reading or writing data.

4–6–1 Writing

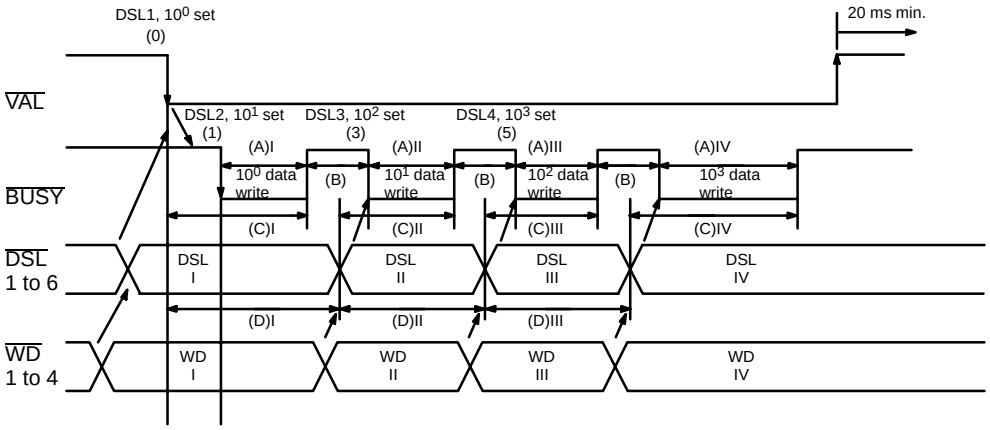

DSL: Data select code
WD: Write data

1) (A)I, (A)II, (A)III…… 40 to 60 ms
2) (A)IV……40 to 90 ms
(When four-digit write data is all ready)
3) (B)……MIN. 30 ms
4) (C)I, (C)II, (C)III…… MAX. 90 ms
5) (C)IV……MAX. 120 ms

4–6–2 Reading

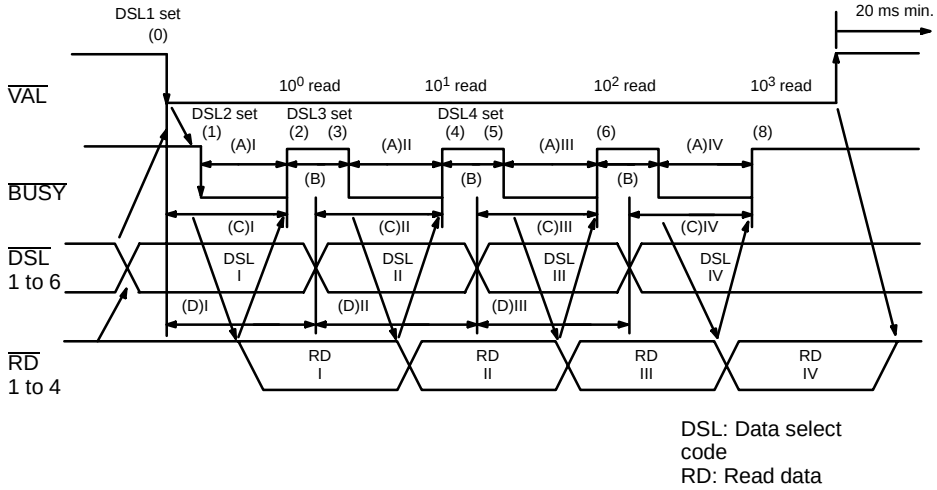

1) (A)I, (A)II, (A)III, (A)IV…… 30 to 50 ms
2) (B)……MIN. 30 ms
3) (C)I, (C)II, (C)III, (C)IV…… MAX. 80 ms

Note If the scanning speed of the PC is too slow to read the low level $\overline{\text{BUSY}}$ signal (part (A) of the above timing chart), change the DSL setting as follows: (D)I > (C)I, or, (D)II > (C)II, (D)III > (C)III

4–7 E5AF-A20: Application Example #1

The following example describes the I/O configuration and programming required to send set values and process values between the E5AF-A20 and the C1000H SYSMAC C-series PC.

4–7–1 I/O Configuration

The following illustration and table show the system configuration and I/O allocations used in this example. *Signal direction* designations are from the view of the E5AF; I/O allocations and PC Unit designations are from the view of the PC.

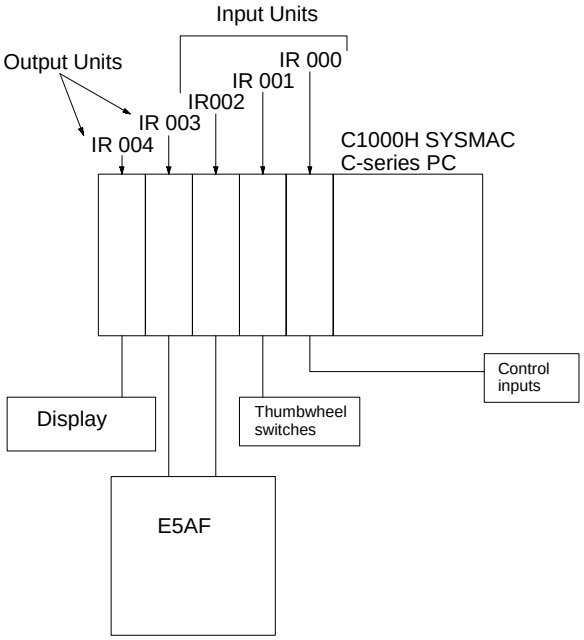

IR 00000	Turned ON to output set value via IR 004 to display
IR 00001	Turned ON to write set value input from IR 001 to E5AF
IR 001	Inputs set value from four thumbwheel switches
IR 002	Inputs data from E5AF to PC
IR 003	Outputs data from PC to E5AF
IR 004	Outputs set value to 4-digit segment display

Terminal no.	Signal name	Signal direction	Description	I/O allocation
1	DSL1	Input	Data select code 2^0	IR 00704 on Output Unit
2	DSL2	Input	Data select code 2^1	IR 00705 on Output Unit
3	DSL3	Input	Data select code 2^2	IR 00706 on Output Unit
4	DSL4	Input	Data select code 2^3	IR 00707 on Output Unit
5	DSL5	Input	Data select code 2^4	IR 00708 on Output Unit
6	DSL6	Input	Data select code 2^5	IR 00709 on Output Unit
7	–––	–––	–––	–––
8	WD1	Input	Write data 2^0	IR 00700 on Output Unit
9	WD2	Input	Write data 2^1	IR 00701 on Output Unit
10	WD3	Input	Write data 2^2	IR 00702 on Output Unit
11	WD4	Input	Write data 2^3	IR 00703 on Output Unit
12	$\overline{\text{VAL}}$	Input	Effective signal	IR 00704 on Output Unit
13	GND	–––	Output side power supply 0 V	–––
14	RD1	Output	Read data 2^0	IR 00900 on Input Unit
15	RD2	Output	Read data 2^1	IR 00901 on Input Unit
16	RD3	Output	Read data 2^2	IR 00902 on Input Unit
17	RD4	Output	Read data 2^3	IR 00903 on Input Unit
18	$\overline{\text{BUSY}}$	Output	Busy signal	IR 00904 on Input Unit
19	–––	–––	–––	–––
20	–––	–––	–––	–––
21	–––	–––	–––	–––
22	–––	–––	–––	–––
23	24 VDC	–––	Output side power supply 24 VDC	–––
24	24 VDC	–––	Output side power supply 24 VDC	–––
25	GND	–––	Output side power supply 24 VDC	–––

4–7–2 Program 1: Read Program

In the following program, a single shift register is used to control data movement of both data select codes and read data. A total of nine scans will be required to move all eight units of data from the E5AF (4 data select codes and 4 digits of read data). The data read into the PC is stored in the DM area and output to the display from there. Data select codes (DSL) are stored in DM 0000 to DM 0003. Data is output to the display via IR 004.

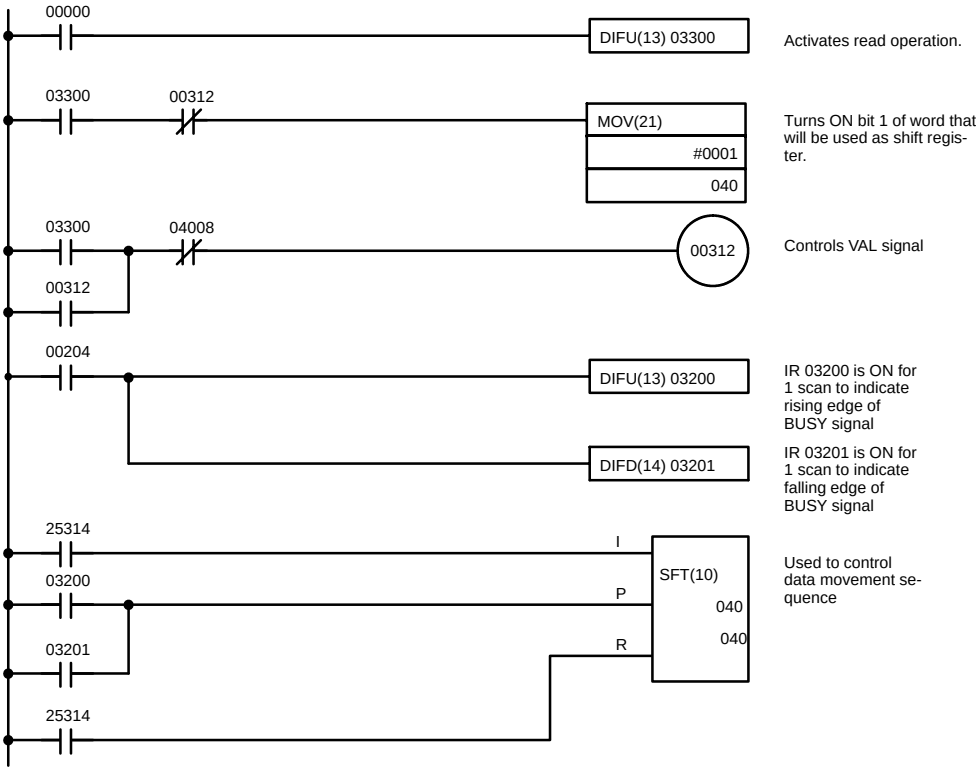

Continues on the next page.

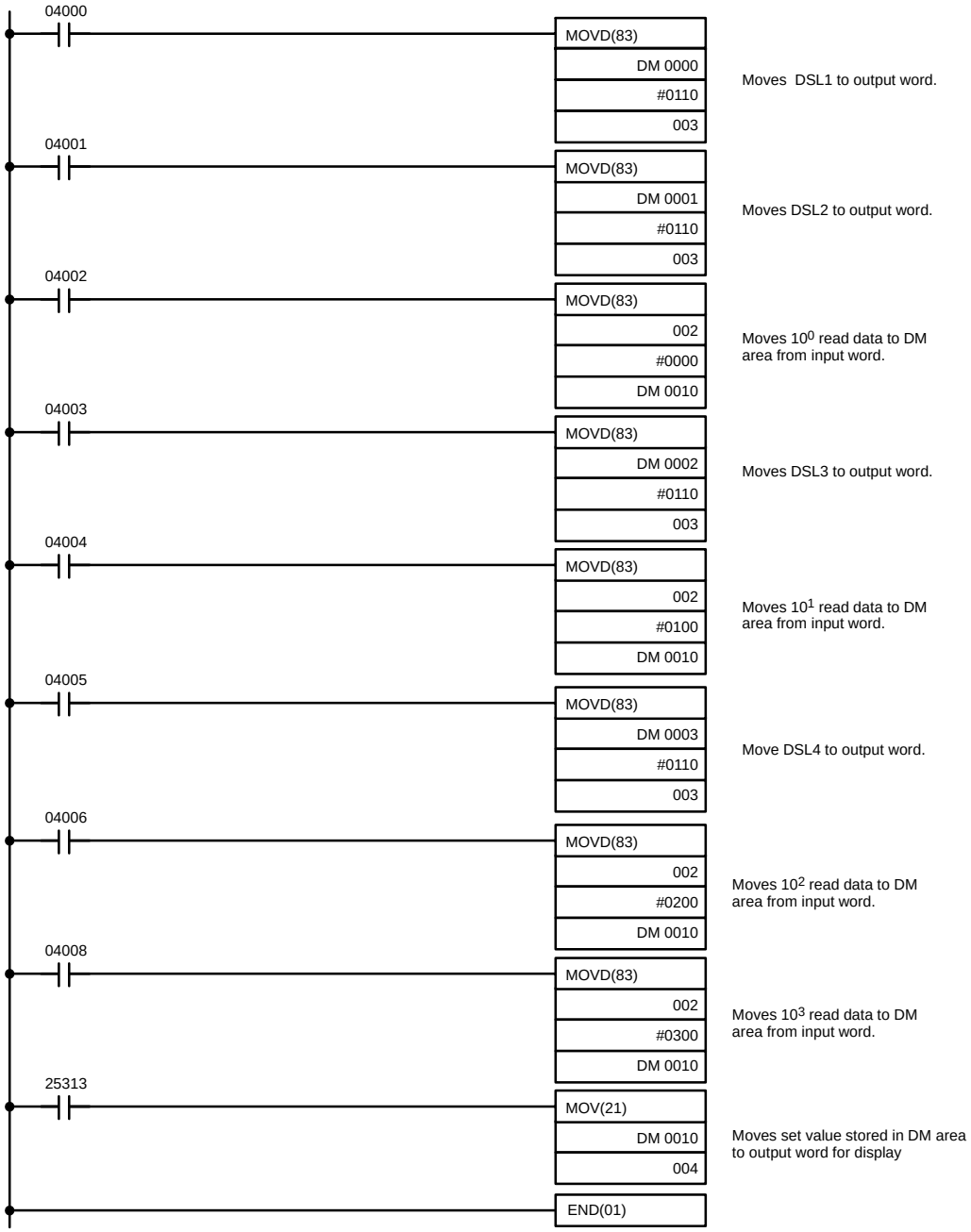

4–7–3 Program 2: Write Program

In the following program, a single shift register is used to control data movement of both data select codes and write data. A total of six scans will be required to move all eight units of data to the E5AF. The data written to the E5AF is taken from DM 0030, which contains the value input from the thumbwheel switches via IR 001 in the last MOVE instruction. The data select codes (DSL) are stored in DM 0020 to DM 0023.

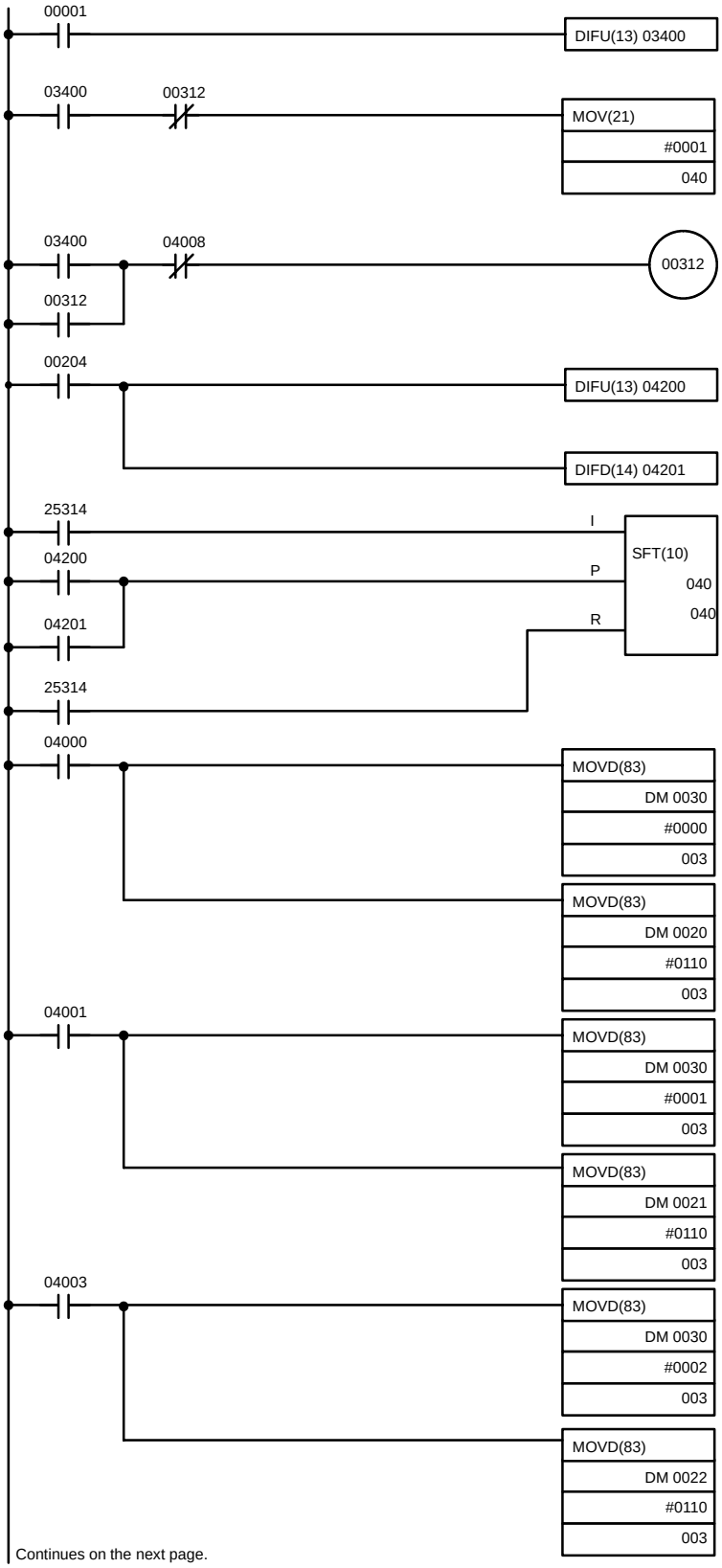

Activates write operation.

Turns ON bit 1 of word that will be used as shift register.

Controls VAL signal

IR 04200 is ON for 1 scan to indicate rising edge of BUSY signal

IR 04201 is ON for 1 scan to indicate falling edge of BUSY signal

Used to control data movement sequence

Moves write data 10^0 to output word.

Moves DSL1 to output word.

Moves write data 10^1 to output word.

Moves DSL2 to output word.

Moves write data 10^2 to output word.

Moves DSL3 to output word.

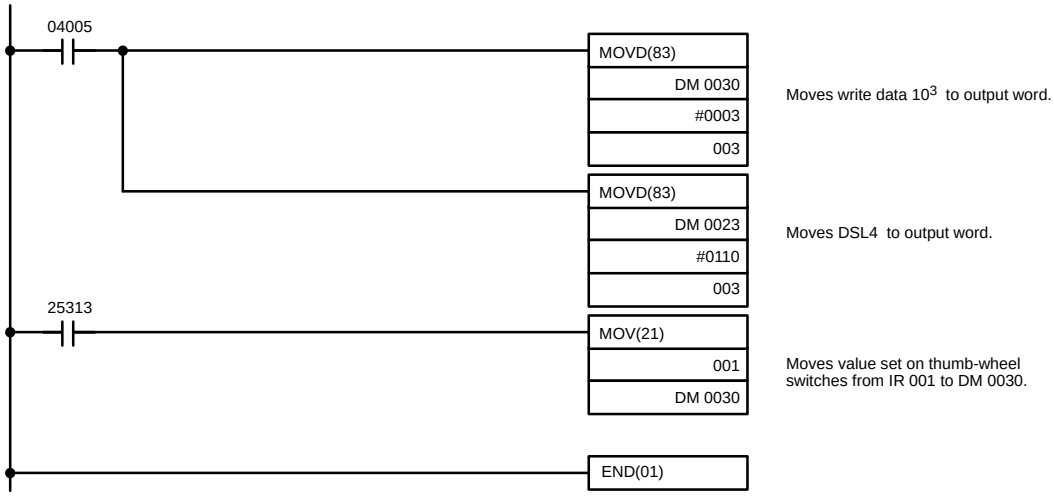

4–7–4 Program 3: Combination of Program 1 and Program 2

The following program combines both read and write operations using a signal shift register to control data movements for both

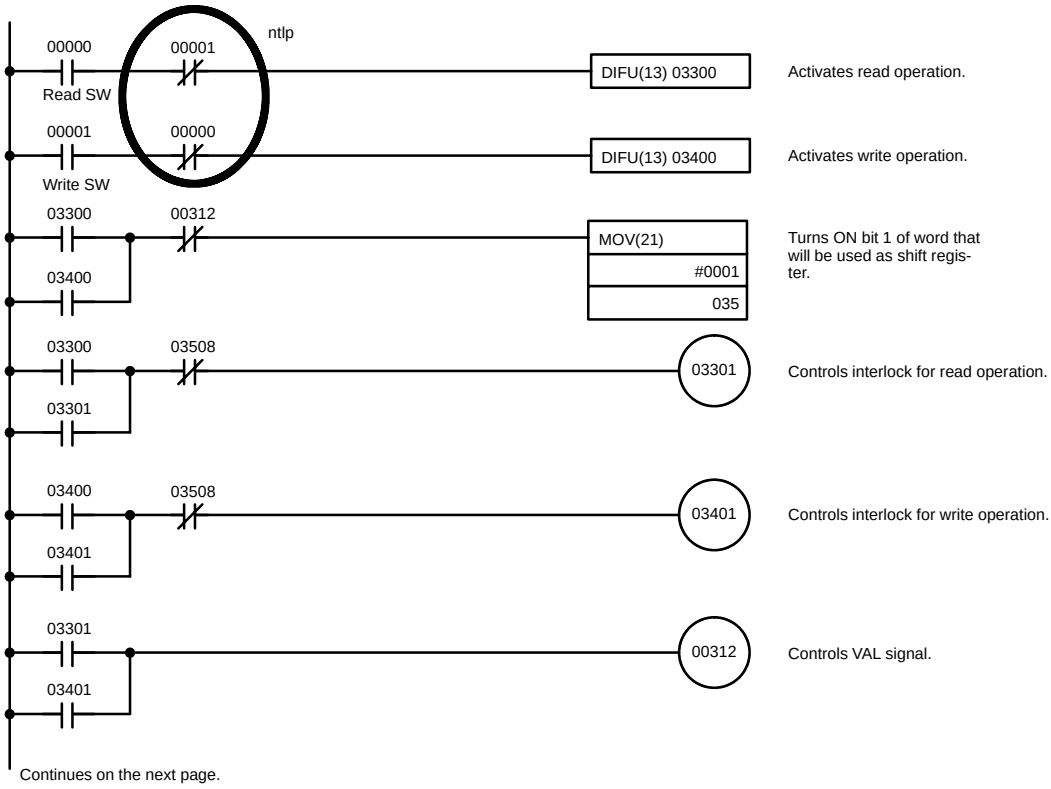

Continues on the next page.

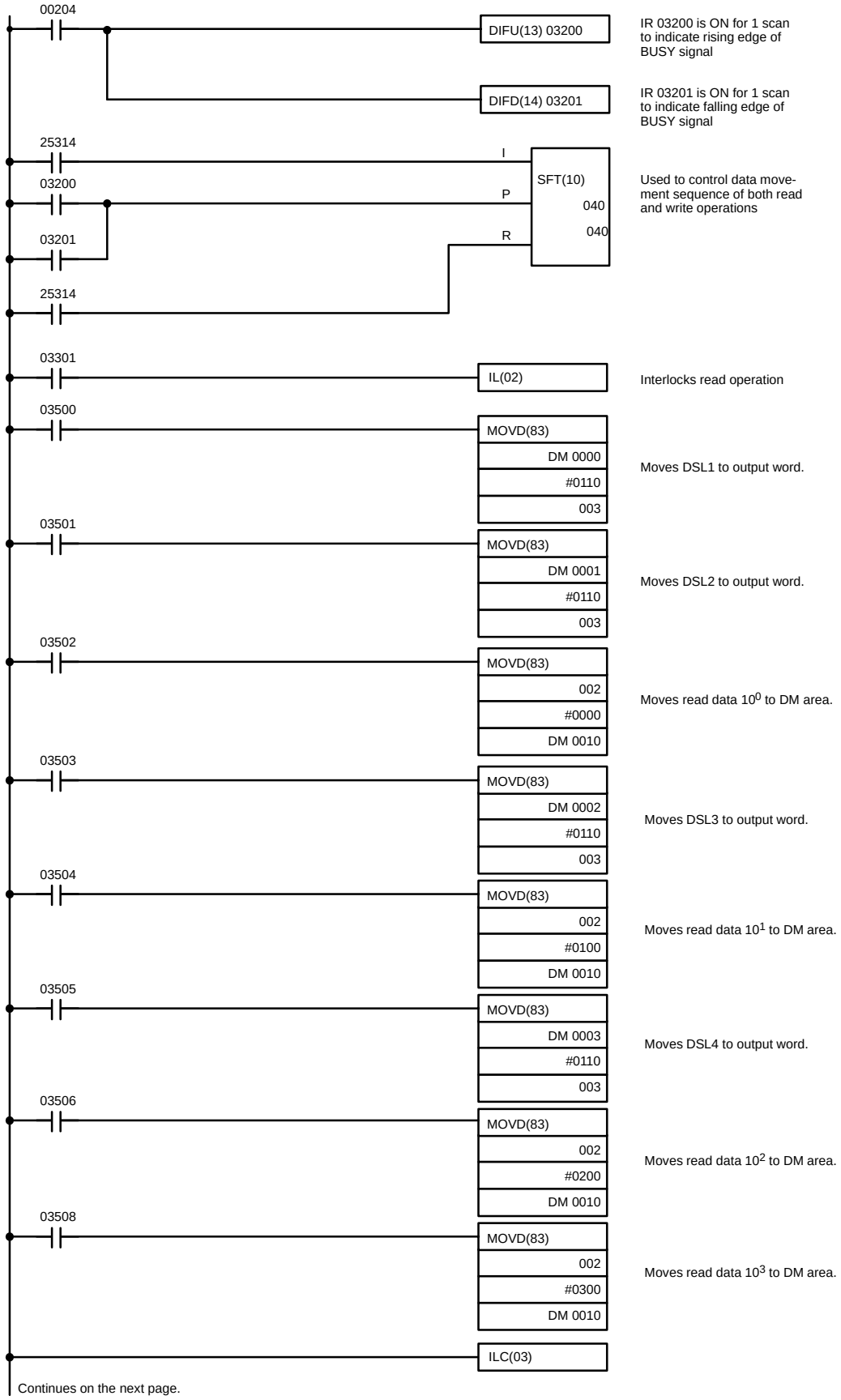

Continues on the next page.

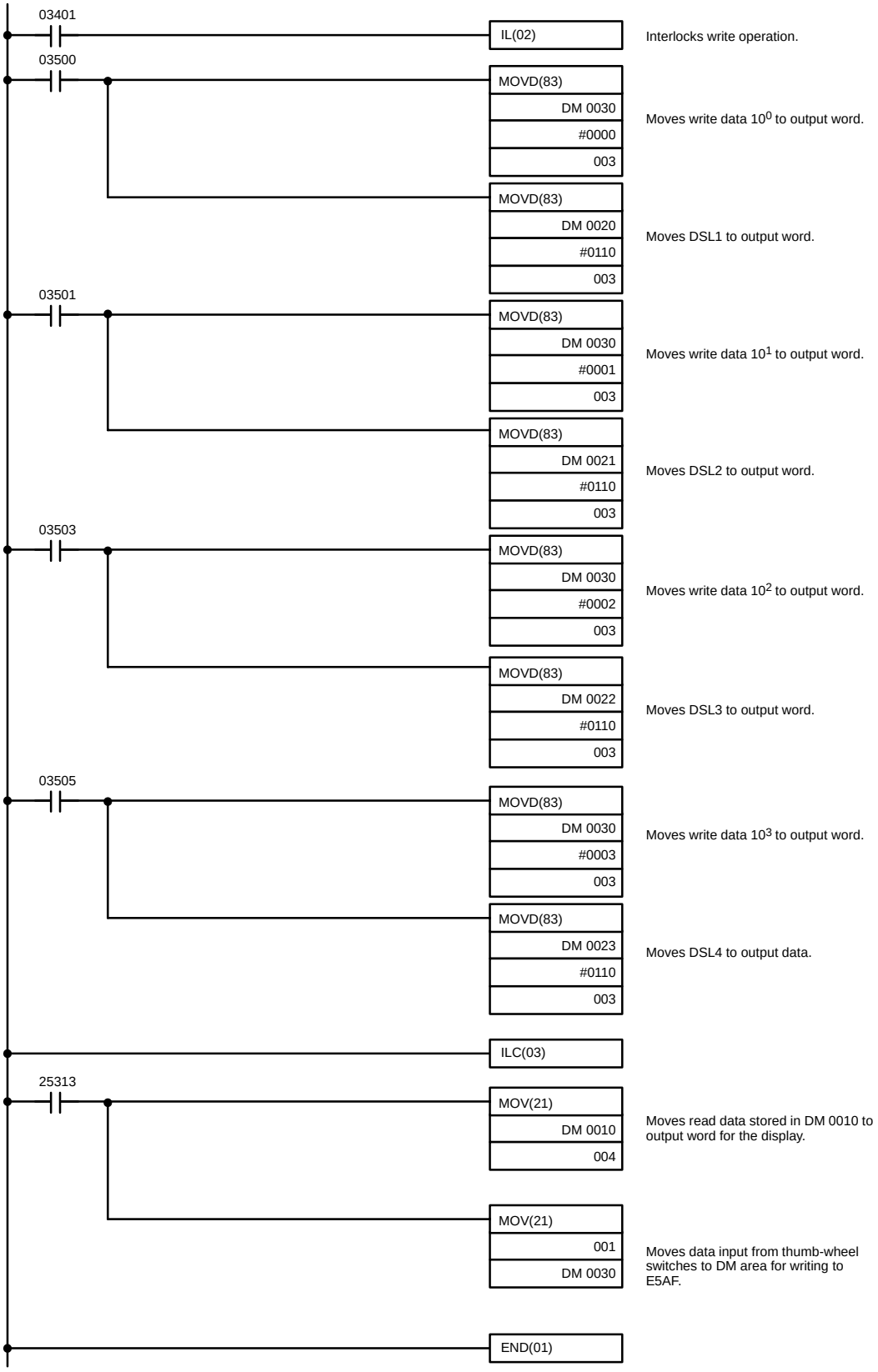
03401
IL(02)
Interlocks write operation.
03500
MOVD(83)
DM 0030
#0000
003
Moves write data 10^0 to output word.
MOVD(83)
DM 0020
#0110
003
Moves DSL1 to output word.
03501
MOVD(83)
DM 0030
#0001
003
Moves write data 10^1 to output word.
MOVD(83)
DM 0021
#0110
003
Moves DSL2 to output word.
03503
MOVD(83)
DM 0030
#0002
003
Moves write data 10^2 to output word.
MOVD(83)
DM 0022
#0110
003
Moves DSL3 to output word.
03505
MOVD(83)
DM 0030
#0003
003
Moves write data 10^3 to output word.
MOVD(83)
DM 0023
#0110
003
Moves DSL4 to output data.
ILC(03)
25313
MOV(21)
DM 0010
004
Moves read data stored in DM 0010 to output word for the display.
MOV(21)
001
DM 0030
Moves data input from thumb-wheel switches to DM area for writing to E5AF.
END(01)

4–8 E5AF-A20: Application Example #2

The following example describes the connections and programming required to transfer set values and process values between the E5AF-A20 and the PC.

4–8–1 Hardware Configuration

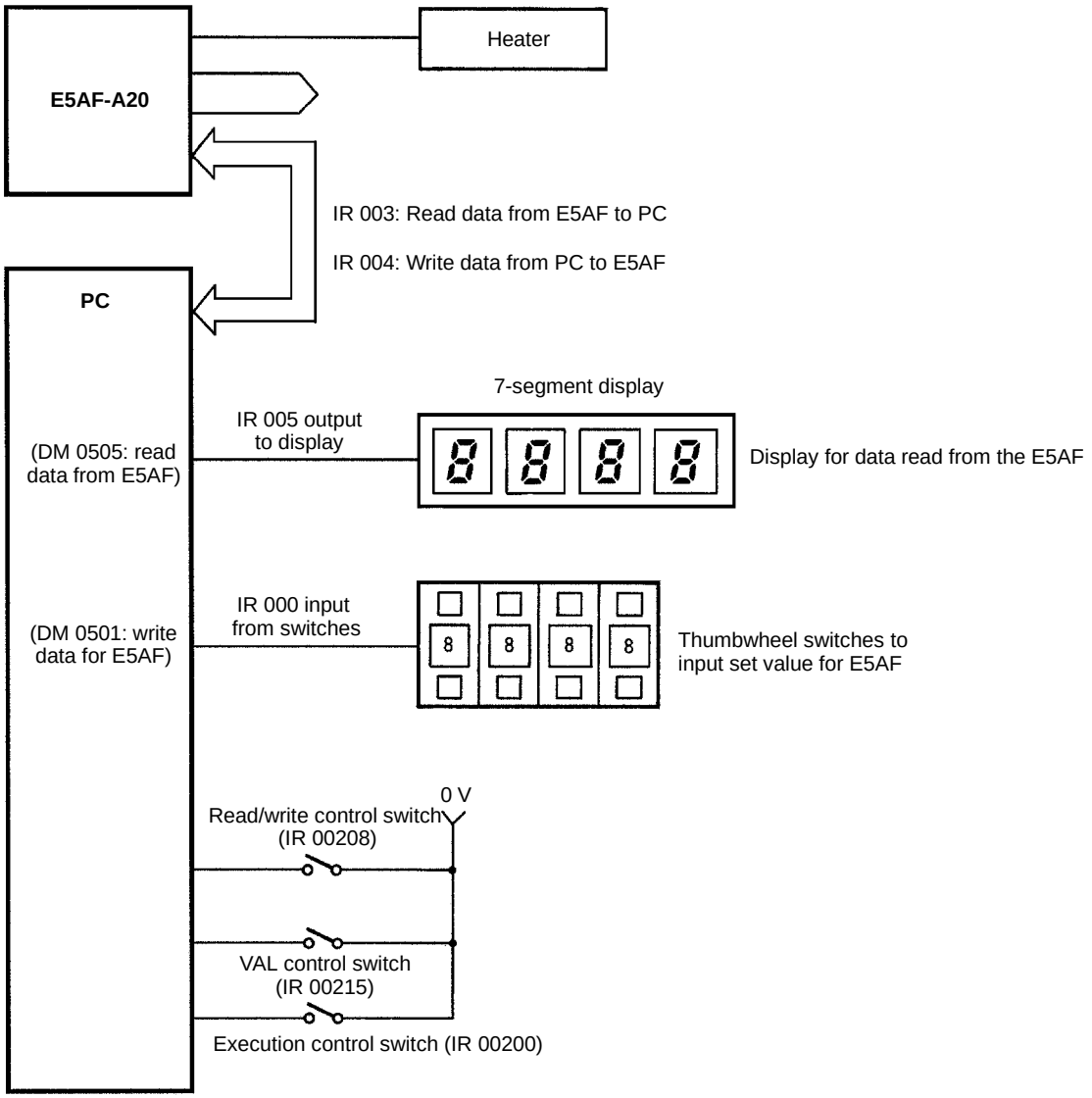

Program Operation

The program provided in this section operates as follows:

1, 2, 3...

1. When the VAL control switch is ON, the E5AF-A20 is ready to process communications.
2. When the read/write control switch is ON, data will be written to the E5AF-A20. When this control switch is OFF, data will be read from the E5AF-A20.
3. Select codes 04 through 07 (set value 1) are used to write data and select codes 20 through 23 are used to read data (the process value).
4. Each time the DSL (data select code) switch is turned ON, the E5AF-A20 increments the select code and read/writes one digit (of the 4 digits).
5. Read data is displayed on a 7-segment display and write data is input via thumbwheel switches.

4–8–2 PC Program Example

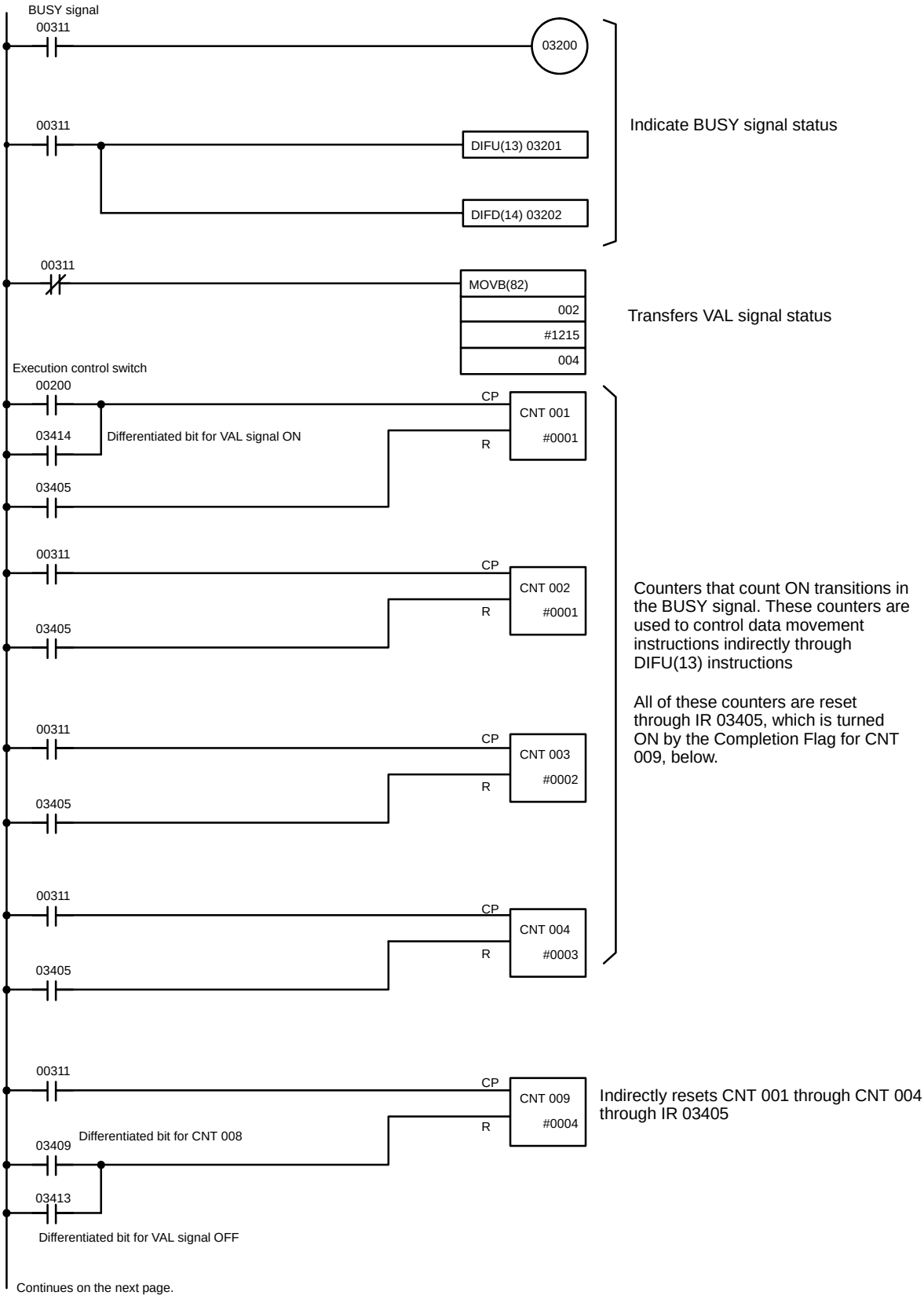

Continues on the next page.

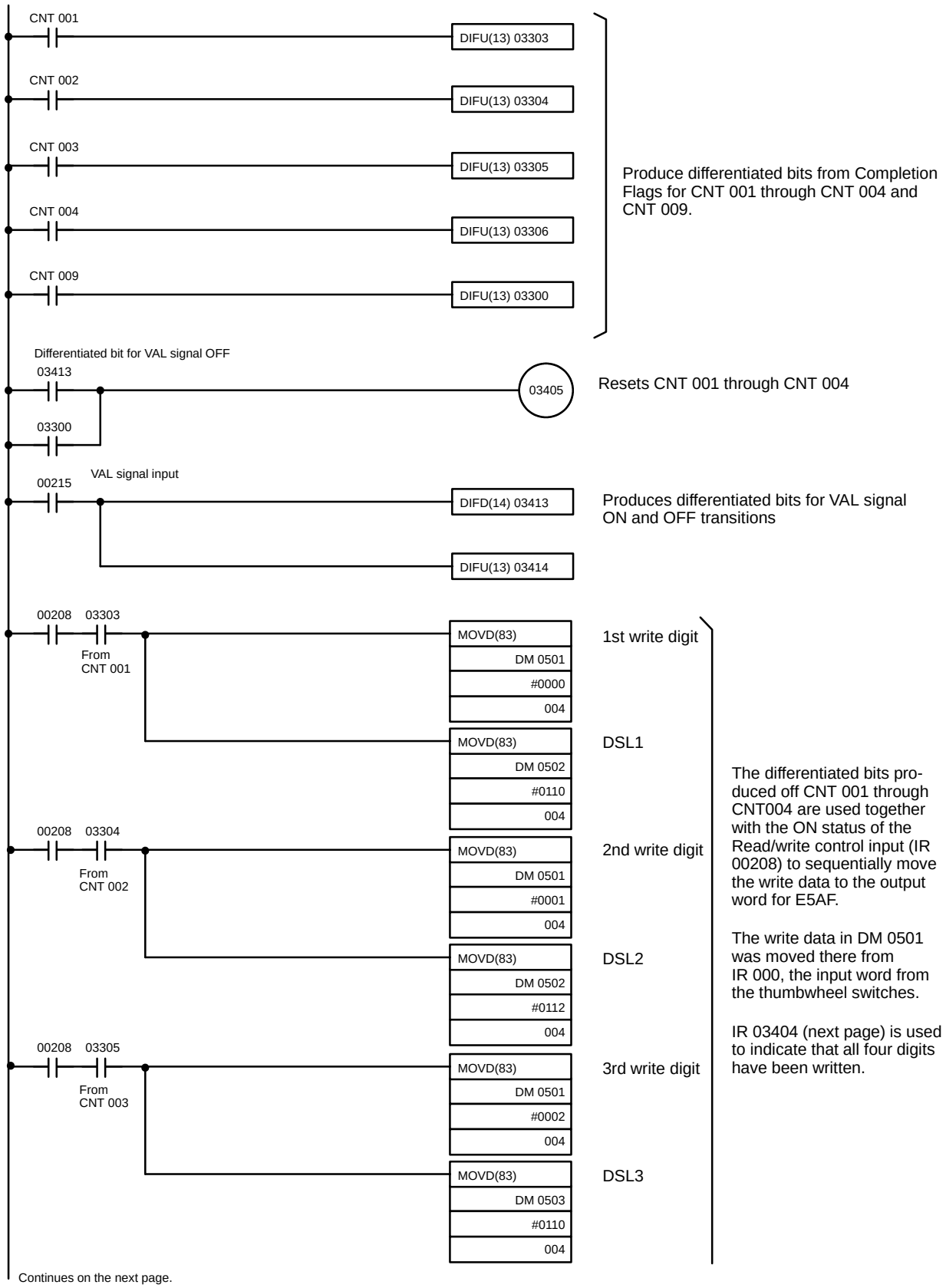

Continues on the next page.

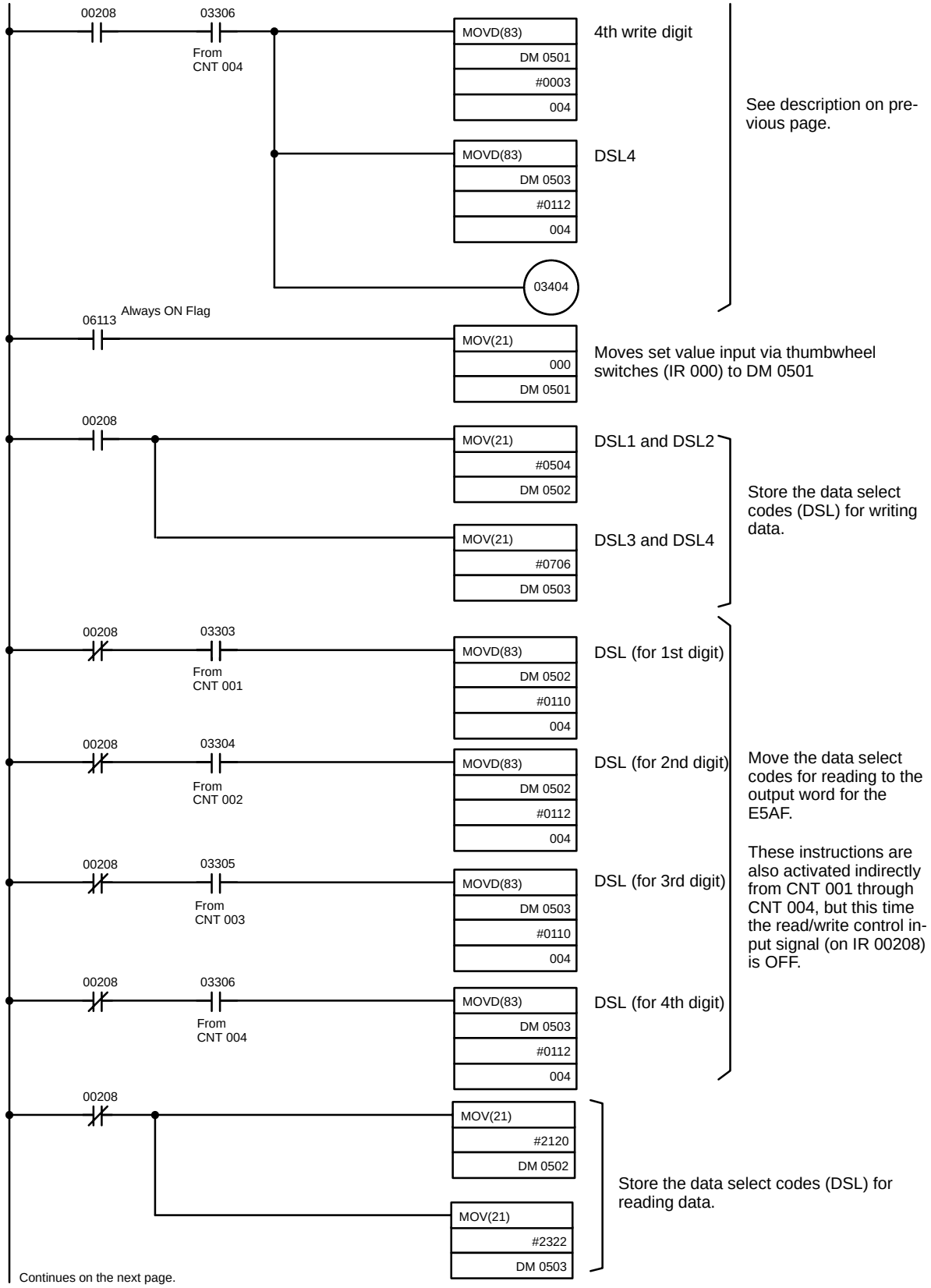
00208
03306
From CNT 004
MOVD(83)
DM 0501
#0003
004
4th write digit
MOVD(83)
DM 0503
#0112
004
DSL4
03404
See description on previous page.
06113
Always ON Flag
MOV(21)
000
DM 0501
Moves set value input via thumbwheel switches (IR 000) to DM 0501
00208
MOV(21)
#0504
DM 0502
DSL1 and DSL2
MOV(21)
#0706
DM 0503
DSL3 and DSL4
Store the data select codes (DSL) for writing data.
00208
03303
From CNT 001
MOVD(83)
DM 0502
#0110
004
DSL (for 1st digit)
00208
03304
From CNT 002
MOVD(83)
DM 0502
#0112
004
DSL (for 2nd digit)
00208
03305
From CNT 003
MOVD(83)
DM 0503
#0110
004
DSL (for 3rd digit)
00208
03306
From CNT 004
MOVD(83)
DM 0503
#0112
004
DSL (for 4th digit)
Move the data select codes for reading to the output word for the E5AF.
These instructions are also activated indirectly from CNT 001 through CNT 004, but this time the read/write control input signal (on IR 00208) is OFF.
00208
MOV(21)
#2120
DM 0502
MOV(21)
#2322
DM 0503
Store the data select codes (DSL) for reading data.
Continues on the next page.

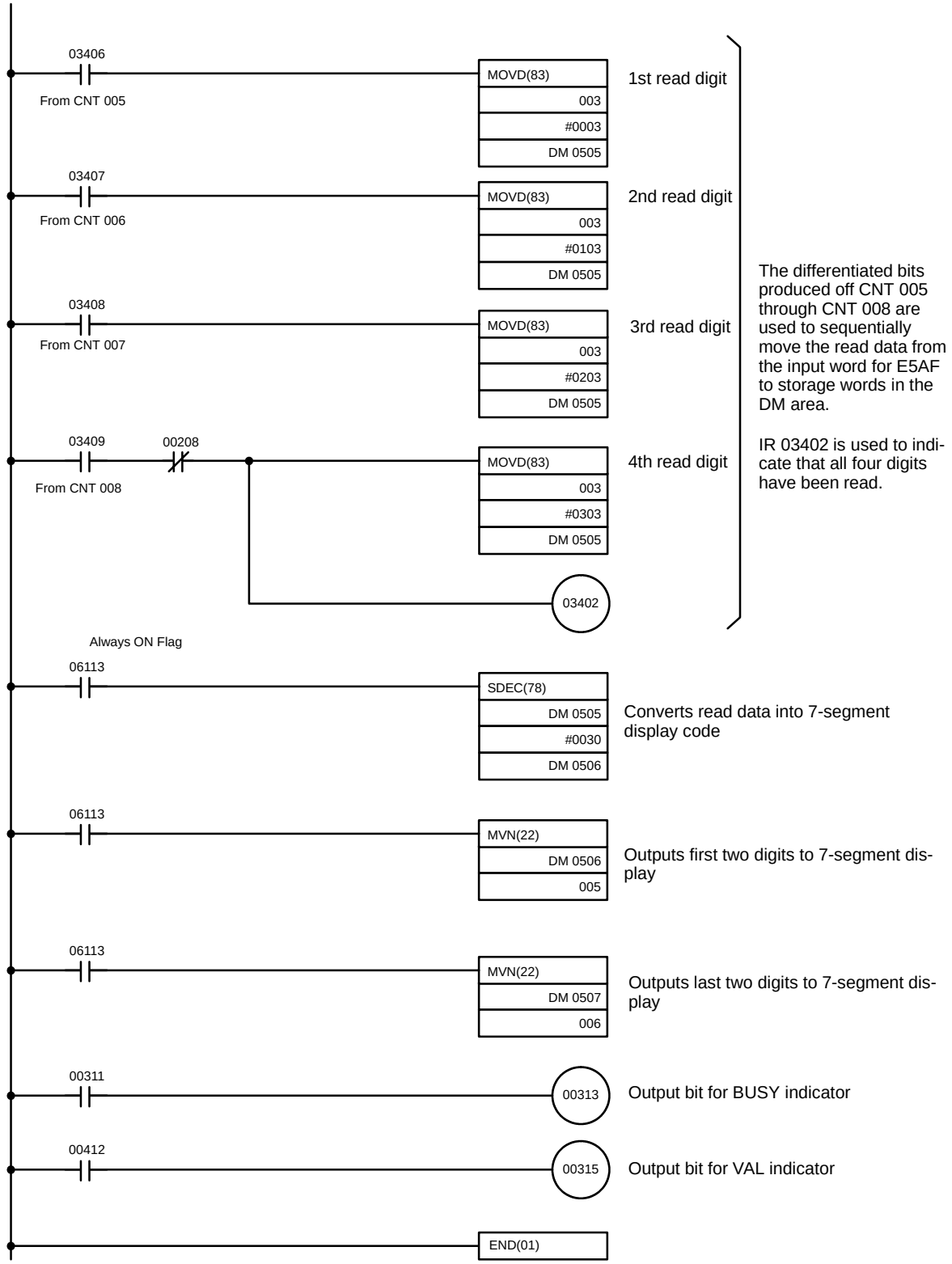
03406
From CNT 005
MOVD(83)
003
#0003
DM 0505
1st read digit
03407
From CNT 006
MOVD(83)
003
#0103
DM 0505
2nd read digit
03408
From CNT 007
MOVD(83)
003
#0203
DM 0505
3rd read digit
03409
00208
From CNT 008
MOVD(83)
003
#0303
DM 0505
4th read digit
03402
The differentiated bits produced off CNT 005 through CNT 008 are used to sequentially move the read data from the input word for E5AF to storage words in the DM area.
IR 03402 is used to indicate that all four digits have been read.
Always ON Flag
06113
SDEC(78)
DM 0505
#0030
DM 0506
Converts read data into 7-segment display code
06113
MVN(22)
DM 0506
005
Outputs first two digits to 7-segment display
06113
MVN(22)
DM 0507
006
Outputs last two digits to 7-segment display
00311
00313
Output bit for BUSY indicator
00412
00315
Output bit for VAL indicator
END(01)

4–8–3 I/O Allocations

I/O Bits

The following I/O bits are used in the IR area of the PC to transfer signals and data between control/display devices and the PC and between the PC and the E5AF.

Bit	IR 000 (Input from thumbwheel switches)	IR 002 (control inputs)	IR 003 (Input from E5AF)	IR 004 (Output to E5AF)
00	Write data 10^0 for E5AF	Execution control input	Not used.	Write data (set value 1) for E5AF
01		Not used		
02				
03				
04	Write data 10^1 for E5AF			Data select output to E5AF
05				
06				
07				
08	Write data 10^2 for E5AF	Read/write control input		
09		Not used.		
10				Not used.
11			BUSY signal input	
12	Write data 10^3 for E5AF		Read data (processes value) from E5AF	VAL control value
13				Not used.
14				
15		VAL control input		

Bit	IR 005	IR 006	IR 007
00	Output of process value to segments a through g of the 7-segment display (1st digit)	Output of process value to segments a through g of the 7-segment display (3rd digit)	Not used.
01			
02			
03			
04			
05			
06			
07	Not used.	Not used.	
08	Output of process value to segments a through g of the 7-segment display (2nd digit)	Output of process value to segments a through g of the 7-segment display (4th digit)	
09			
10			
11			
12			
13			Output to BUSY indicator
14			Not used
15	Not used.	Not used.	Output to VAL indicator

Counters

The various data transfers in the program are timed using nine counters, as shown in the following table. The Completion Flags for these counters are programmed through operand bits of DIFU(13) (called differentiated bits) to activate actual data transfers.

Program address	No.	Set value	Differentiated bit	Application
Not used.	CNT 000	Not used.	Not used.	Not used.
00146	CNT 001	#001	IR 03303	1st digit of write data
00150	CNT 002	#001	IR 03304	2nd digit of write data
00154	CNT 003	#002	IR 03305	3rd digit of write data
00158	CNT 004	#003	IR 03306	4th digit of write data
00292	CNT 005	#001	IR 03406	1st digit of read data
00296	CNT 006	#002	IR 03407	2nd digit of read data
00300	CNT 007	#003	IR 03508	3rd digit of read data
00304	CNT 008	#004	IR 03409	4th digit of read data
00164	CNT 009	#004	IR 03300	Completion of all 4 digits of write data (indirectly resets CNT 001 through CNT 004)

Work Bits

The following bits are used within the program to control execution.

Bit	IR 032	IR 033	IR 034
00	Bit indicating BUSY signal ON	Differentiated bit for CNT 009 Completion Flag	Not used.
01	Differentiated bit for BUSY signal ON	Not used.	
02	Differentiated bit for BUSY signal OFF		Bit indicating 4 digits read
03	Not used.	Differentiated bit for CNT 001 Completion Flag	Reset bit for CNT 005 to CNT 008
04		Differentiated bit for CNT 002 Completion Flag	Bit indicating 4 digits written
05		Differentiated bit for CNT 003 Completion Flag	Reset bit for CNT 001 to CNT 004
06		Differentiated bit for CNT 004 Completion Flag	Differentiated bit for CNT 005 Completion Flag
07		Not used.	Differentiated bit for CNT 006 Completion Flag
08			Differentiated bit for CNT 007 Completion Flag
09			Differentiated bit for CNT 008 Completion Flag
10			Not used.
11			
12			
13			Differentiated bit indicating VAL signal OFF
14			Differentiated bit indicating VAL signal ON
15			Not used.

4–8–4 Counter Operation Timing Chart

The following illustrates the counter sequence and timing.

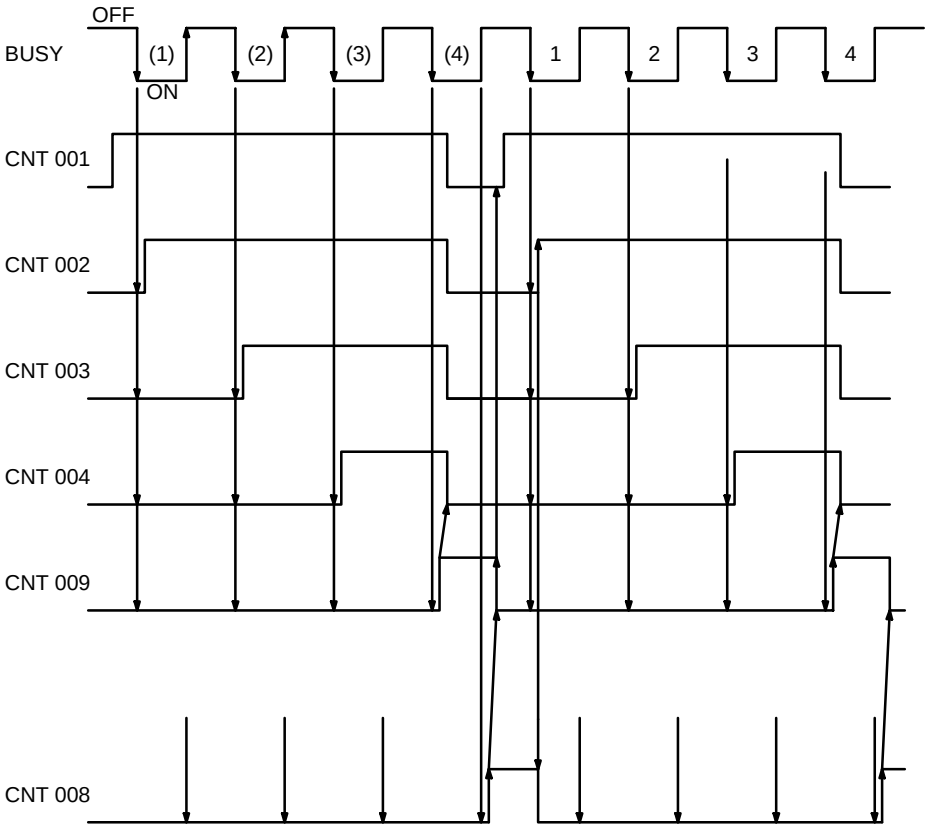

SECTION 5
Transmission Output Models

This section provides the basic elements relating to the connections and the settings of the Transmission Output Models.

5–1 Connection of Output Connector 68
5–1–1 Connection Example 68
5–1–2 Terminals 68
5–1–3 Connection 68
5–2 Settings Before Switching Power On 69

5–1 Connection of Output Connector

5–1–1 Connection Example

Process temperature or process value opening that are output by the E5AF Transmission Output Models is in a range of 4 to 20 mA. This enables smooth valve control and the output can be easily recorded by inputting it to an external recorder.

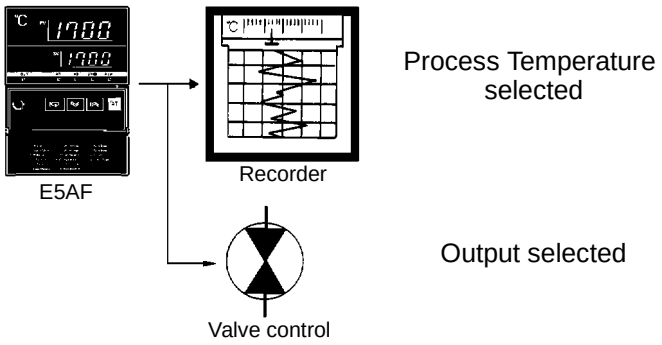

5–1–2 Terminals

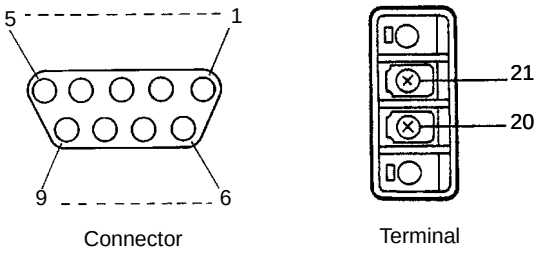

Signal name	Terminal number	
	Connector connection	Terminal connection
Transmission output (positive)	1, 2, 3, 4, and 5 are common	21
Transmission output (negative)	6, 7, 8, and 9 are common	20

Plug: XM4A-0921 (OMRON) or equivalent one.
Hood: XM2S-0911 (OMRON) or equivalent one.

5–1–3 Connection

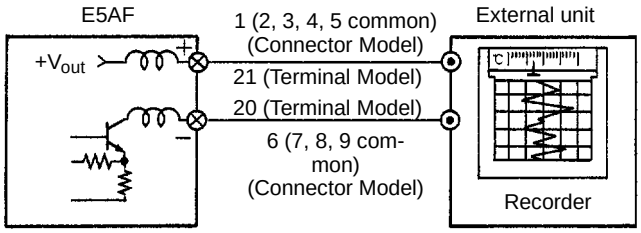

Output: 4 to 20 mA DC with a load resistance of 600W max.

Output contents: Process temperature/output value or process value opening (selected by internal switch)

Resolution when outputting process temperature:
Approx. 1/3,200 resolution or 0.1%C/%F, whichever is larger.
When outputting output value: 0.1% (1% in manual operation)

Output updating time: 500 ms

Normal-reverse switching function: Yes

Note The output specifications of the E5AF Transmission Output Models and those of the E5AX Transmission Output Models are identical.

5–2 Settings Before Switching Power On

Set all switches as described here before switching on power to the Fuzzy Temperature Controller. For mounting or removing the Output Unit or setting each function switch, refer to *3–2 Before Applying Power*. However, no terminator designation is necessary.

Selection of Output Data

With the E5AF-AF Transmission Output Models, the contents of its output can be set.

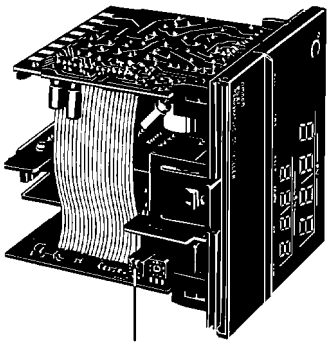

Transmission output selector switch (SW207)

Transmission Output Selector (SW207)

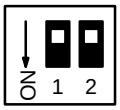

Items		Selector position	
		1	2
Output contents	Output value	ON	–––
	Process temperature	OFF	
Operation	Reverse output	–––	ON
	Normal output	–––	OFF
Settings before shipment		OFF	OFF

Note 1. Process temperature

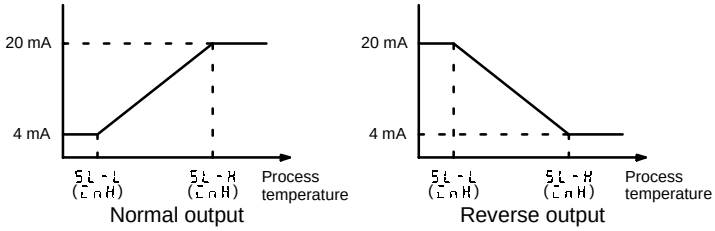

2. Control Output

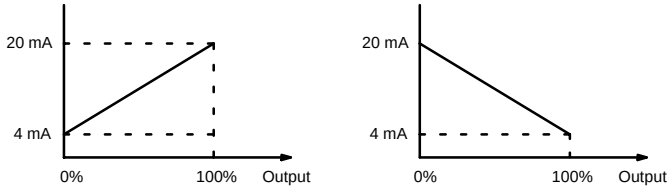

Normal output Reverse output

Output Data vs. Output Current

Output value	Process temperature		Output amount	
	Normal	Reverse	Normal	Reverse
20 mA to 4 mA	sl–h to sl–l	sl–l to sl–h	100.0 to 0.0%	0.0 to 100.0%

Note
1. The upper limit of the set value is expressed by sl–h and the lower limit of it is expressed by sl–l.
2. In the case of A/D error, memory error, or abnormal input, 1 mA (safety side) is output in the same manner as the Electrical Current Output Unit.
3. If the process temperature exceeds either edge of the set limit, the transferoutput will rither be 4 mA or 20 mA.

Appendix A
ASCII List

b_8								
b_7	0	0	0	0	1	1	1	1
b_6	0	0	1	1	0	0	1	1
b_5	0	1	0	1	0	1	0	1

b_8	b_7	b_6	b_5	b_4	b_3	b_2	b_1
				0	0	0	0
				0	0	0	1
				0	0	1	0
				0	0	1	1
				0	1	0	0
				0	1	0	1
				0	1	1	0
				0	1	1	1
				1	0	0	0
				1	0	0	1
				1	0	1	0
				1	0	1	1
				1	1	0	0
				1	1	0	1
				1	1	1	0
				1	1	1	1

Even parity

R \ C	0	1	2	3	4	5	6	7
0	NUL	DLE	SPACE	0	@	P	‘	p
1	SOH	DC1	!	1	A	Q	a	q
2	STX	DC2	”	2	B	R	b	r
3	ETX	DC3	#	3	C	S	c	s
4	EOT	DC4	$	4	D	T	d	t
5	ENQ	NAK	%	5	E	U	e	u
6	ACK	SYN	&	6	F	V	f	v
7	BEL	ETB	,	7	G	W	g	w
8	BS	CAN	(	8	H	X	h	x
9	HT	EM	)	9	I	Y	i	y
10	LF	SUB	*	:	J	Z	j	z
11	VT	ESC	+	;	K	[	k	{
12	FF	FS	,	<	L	\	l	¦
13	CR	GS	–	=	M	]	m	}
14	SO	RS	·	>	N	j	n	~
15	SI	US	/	?	O	Q	o	DEL

Appendix B
List of Optional Accessories

Link Adapters

3G2A9-AL001

Three RS-422 connectors for RS-422 line distribution.

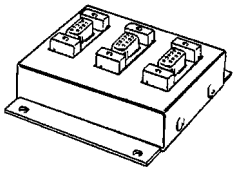

3G2A9-AL004-E

One RS-232C connector and two RS-422 connectors for RS-232C and RS-422.

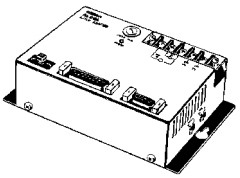

Connectors

XM4A-0921, XM4A-2521 (Plug)

D-sub connectors. Use in combination with XM2S.

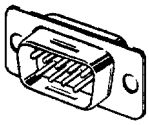

XM2S-0911, XM2S-2511 (Hood)

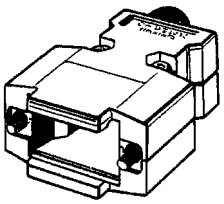

Optical Link Adapter

Z3RN

To extend RS-232C line.

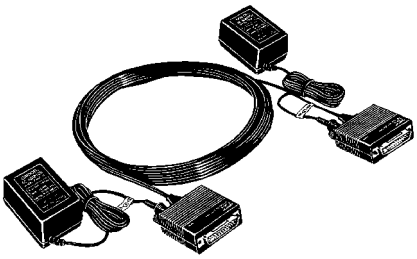

Recorder

E55A-A6_C, E55A-B__C (4 to 20 mA input)

In conjunction with E5AF-_F, the process temperature can be recorded.

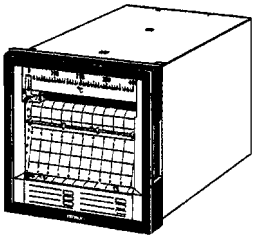

Index

A

accessories, optional, 73, 74

ASCII list, 71

auto-tuning
- start, 33
  - command format, 33
  - response format, 34
- stop, 34
  - command format, 34
  - response format, 34

B

blocks, 22
- command, 22
- frame check sequence, 22
- response, 22

C

carrier detect signal, 13, 21

CD signal, 13, 21

communications, 21
- BCD
  - error, 44
  - important notes on programming, 44
- connectors, BCD, 42
- control procedures, 21
- operation example, 40
- program example, 37
- RS-232C specifications, 21
- RS-422 specifications, 21
- RS-485 specifications, 21
- time, 36

connection, E5AF-A20 and PC, 42

connections, output connector, 68

connectors, 6
- BCD, 42
- BCD type, 43
- connecting, 9

D

data select code
- BCD, 45
- error code, 46
- explanation, 46
- memory status, 46
- mode status, 46
- status, 47
  - alarm type, 47
  - sensor type, 48

Data Terminal Equipment, 13

Definition of Terminal, 21

display
- process value (PV), 2
- set value (SV), 2

display levels, 20

DTE, 13, 21

E

E5AF-A20
- counter operation timing chart, 65
- exclusive read programs, 51, 55
- exclusive write programs, 53
- hardware configuration, 58
- I/O allocation, 49
- I/O relay list, 63
- PC program example, 59
- timer and counter list, 64

end code
- error criteria, 35
- list, 35
- order of priority, 35

error, undefined, 34

error control, 21, 22
- block check, 22
- character check, 22

F

FCS, 22

frame check sequence, 22

front cover, 2

front panel, 2

fuzzy scale 1
- reading, 27
- writing, 27

fuzzy scale 2
- reading, 27
- writing, 27

fuzzy strength
reading, 27
writing, 27

H

header codes, 24

heater current value, read, 30
command format, 30, 31

I

indicator
alarm output (ALM1), 2
alarm output 2 (ALM2), 2
auto-tuning, 2
output (OUT), 2
remote, 2
shift, 2

initial status, read, 31
alarm mode, 32
command format, 31
response format, 31

interface specifications, 12
RS-232C, 12
RS-422, 13
RS-485, 16

K

keys
Auto-tuning Key, 2
Down Key, 2
Level Key, 2
Mode Key, 2
operation, 20
Remote Key, 2
Up Key, 2

L

local mode, 2

M

models, Heater Burnout Detection, 3

modes, alarm output, 32

N

non-volatile memory, 25

O

opening, E5AF, 18

operations, BCD, front key section, 44

output connector, 68
connection, 68
connection example, 68
terminals, 68

Output Unit
mounting, 18
removing, 18

P

power, settings, 69

power application, BCD, setting, 44

precautions, 23

process temperature
RAM data abnormality, 30
reading, 29
command format, 29
response format, 29

R

RAM data abnormality, 30

RAM data all save, 26
command format, 26
response format, 26

remote mode, 2

remote/local mode selection, 26
command format, 26
response format, 27

RS-232C
communications signals, 12
connections, 12

RS-422
communications signals, 13
connections, 14
system examples, 15

RS-485
communications signals, 16
connections, 17

S

set limit values, reading, 28
command format, 28
response format, 28

set values
reading, 27
command format, 28
response format, 28
writing, 27
command format, 27
response format, 27

settings
baud rate, 20
output data vs. output current, 70
selection of output data, 69
transmission output selector (SW207), 69
unit number, 20

switches
function, 18
terminator designation, 19

T

terminal, 6

terminals, BCD type, 43

timing chart
reading, 49
writing, 48

W

write modes
backup mode, 25
command format, 26
RAM write mode, 25
response format, 26
selection, 25

Revision History

A manual revision code appears as a suffix to the catalog number on the front cover of the manual.

Cat. No. Z77-E1-1

Revision code

The following table outlines the changes made to the manual during each revision. Page numbers refer to the previous version.

Revision code	Date	Revised content
1	June 1992	Original production