OMRON

PLC-based Process Control Engineering Guide

Cat. No. **W468-E1-01**

Introduction

PLC-based process controller is a process control system which has the base of SYSMAC SC/CJ series. It can be adopted for both loop control which controls analog signals and sequence control which mainly handles contacts.
By combining a loop controller and process I/O units, loop control functionality can be added onto the PLC, maintaining the basic PLC function.When developing a system, operating environment, such as initial setting of PLC is required, so that the PLC can operate.
Then, utilize CX-Process, the tool software of loop controller to build the system. HMI can be selected from the Touch panel (NS series), special monitoring software CX-Process Monitor Plus, and general HMI software, depending on the application.

This manual describes the procedure to build a PLC-based process control system.The engineering method may differ depending on the devices. In this manual, an example system is built on the Loop-control CPU Unit (CJ1G-CPU**P) and HMI recommended by Omron is combined.

About this Manual

This manual describes the procedure to build a PLC-based Process Control system and includes the sections below.

Section1 outlines the features and mechanism of the Loop Controllers
Section2 describes the procedure to build an example system on the Loop Controller.
Section3 provides the names and functions of parts, and provides other information required toinstall and operate Loop Controllers.
Section 4 describes application cases of PLC-based Process Control system.

The CS-series CS1W-LCB01 and CS1W-LCB05 Loop Control Boards, CS1D-CPU**P Process-control CPU Units, and CJ1G-CPU**P Loop-control CPU Units help you build an instrumentation system comprising multiple loops. A Loop Control Board is installed as an Inner Board in the CPU Unit of a CS-series PLC (Programmable Controller).

The CS1W-LCB01 and CS1W-LCB05 Loop Control Boards must be installed in CS1-H CPU Units.They cannot be used in CS1 CPU Units.

Please read this manual and the other manuals related to the CS1W-LCB01 and CS1W-LCB05 Loop Control Boards, CS1D-CPU**P Process-control CPU Units, and CJ1G-CPU**P Loop-control CPU Units carefully and be sure you understand the information provided before attempting to install and operate the products. The manuals used with the CS1W-LCB01 and CS1W-LCB05 Loop Control Boards, CS1D-CPU**P Process-control CPU Units, and CJ1G-CPU**P Loop-control CPU Units are listed in the following table. The suffixes have been omitted from the catalog numbers. Be sure you are using the most recent version for your area.

Name	Contents	Cat. No.(suffixes omitted)
PLC-based Process Control Engineering Guide (This manual)	Describes the procedure to build a PLC-based Process Control system.	W468
SYSMAC CS/CJ SeriesCS1W-LCB01, CS1W-LCB05, CS1D-CPU**P, and CJ1G-CPU**P Operation Manuals	Describes the basic running of the Loop Control Boards (excluding detailed descriptions of the function blocks).	W406
SYSMAC CS/CJ SeriesCS1W-LCB01, CS1W-LCB05,CS1DCPU**P, and CJ1G-CPU**P Function Block Reference Manual	Provides detailed information on the function blocks.	W407
CXONE-AL**C-ECX-One FA Integrated Tool Package Setup Manual	Provides an overview of the CX-One FA Integrated Tool and installation procedures.	W444
SYSMAC CS/CJ SeriesCX-Process ToolOperation Manual	Describes operation of the CX-Process Tool.	W372
Faceplate Auto-Builder for NSOperation Manual	Describes operation of the software that generates NS-series PT projects from a CSV file output by the CX-Process Tool.	W418

When using CS1D Process-control CPU Units, refer to the following manuals for information on theCS1D CPU Unit elements.

Name	Contents	Cat. No.(suffixes omitted)
SYSMAC CS SeriesCS1D-CPU**H, CS1D-DPL01CS1D-PA/PD***CS1D Duplex SystemOperation Manual	Describes the setup and operation of CS1DDuplex systems.	W405

When using CJ Series Loop-control CPU Units, refer to the following manuals for information on the CJ1-H CPU Unit elements.

Name	Contents	Cat. No.(suffixes omitted)
SYSMAC CJ SeriesProgrammable Controllers Operation ManualCJ1G/H-CPU**H, CJ1G-CPU**P,CJ1M-CPU**,CJ1G-CPU**	Provides an outlines of and describes the design, installation, maintenance, and otherbasic operations for the CJ-series PLCs.	W393
SYSMAC CS/CJ SeriesProgrammable ControllersProgramming ManualCS1G/H-CPU**-EV1, CS1G/H-CPU**H,CS1DCPU**H, CS1D-CPU**S,CJ1G/H-CPU**H, CJ1G-CPU**P,CJ1M-CPU**, CJ1G-CPU**	This manual describes programming andother methods to use the functions of theCS/CJ-series PLCs.	W394
SYSMAC CS/CJ SeriesProgrammable ControllersInstructions Reference ManualCS1G/H-CPU**-EV1, CS1G/H-CPU**H,CS1DCPU**H, CS1D-CPU**S,CJ1G/H-CPU**H, CJ1G-CPU**P,CJ1M-CPU**, CJ1G-CPU**	This manual describes programming andother methods to use the functions of theCS/CJ-series PLCs.	W340

WARNING Failure to read and understand the information provided in this manual may result in personal injury or death, damage to the product, or product failure. Please read each section in its entirety and be sure you understand the information provided in the section and related sections before attempting any of the procedures or operations given.

About Loop Controllers

Loop Control Types, Functional Elements, and Versions

Loop Controller Types

There are two types of Loop Controller: Separate Loop Controllers and Loop Controllers Pre-installed in CPU Units.

Loop Controller Type	Type name	Product name	Model	PLC series and Unit type
Separate	Separate Loop Controller	Loop Control Unit	CS1W-LC001	CS-series CPU Bus Unit Loop Controller
		Loop Control Board	CS1W-LCB**	CS-series Inner Board Loop Controller
Pre-installed in CPU Unit	CPU Unit with Pre-installed Loop Controller	Process-control CPU Unit	CS1D-CPU**P	A one-Unit Loop Controller consisting of an Inner Board Pre-installed in a CS-series CS1D-H CPU Unit
		Loop-control CPU Unit	CJ1G-CPU**P	A one-Unit Loop Controller consisting of an Inner Board pre-installed in a CJ-series CJ1-H CPU Unit.

Loop Controller Function Elements

- Separate Loop Controllers consist of only the Loop Controller functional element (i.e., the Loop Controller element).
- CPU Units with Pre-installed Loop Controller consist of a CPU Unit functional element (i.e., the CPU Unit element) and the Loop Controller functional element (i.e., the Loop Controller element).

Versions

- The functional elements (i.e., the CPU Unit element and Loop Controller element) have versions.

Human-Machine Interface Recommended by Omron

Human-machine interface	Recommended Software/ Device
HMI Software	Omron, CX-Process Monitor Plus
PT	Omron, NS Series PT

Notation in this manual

This manual uses the following notation.

- "Loop Controller" is used as a generic term to refer to the Loop Controllers in general.
- "LCB**" is used to refer to specific Loop Controller functional elements. For example, the Loop Controller function element in a CS1W-LCB05 Loop Controller Board is the LCB05, so "LCB05" is used to refer to the Loop Controller functional element.

EX.) "LCB05 functional elements" is used to refer to Loop Controller functional element of "CS1W-LCB05". "LCB03 functional elements" is used to refer to Loop Controller functional element of Loop CPU Unit CJ1G-CPU44P, because the Loop Controller elements pre-installed in the CPU is LCB03.

- Model numbers are used to refer to specific Loop Controller models.

Notice:

OMRON products are manufactured for use according to proper procedures by a qualified operator and only for the purposes described in this manual.The following conventions are used to indicate and classify precautions in this manual. Always heed the information provided with them. Failure to heed precautions can result in injury to people or damage to property.

WARNING Indicates an imminently hazardous situation which, if not avoided, could result in death or serious injury. Additionally, there may be severe property damage.

CAUTION Indicates an imminently hazardous situation which, if not avoided, may result in minor or moderate injury, or property damage.

OMRON Product Reference

All OMRON products are capitalized in this manual. The work "Unit" is also capitalized when it refers to an OMRON product, regardless of whether or not it appears in the proper name of the product.
The abbreviation "Ch" which appears in some displays and on some OMRON products, often means "word" and is abbreviated "Wd" in documentation in this sense.
The abbreviation "PLC" means Programmable Controller. "PC" is used, however, in some Programming Device displays to mean Programmable Controller.

Visual Aids

The following headings appear in the left column of the manual to help you locate different types of information.

NOTE: Indicates information of particular interest for efficient and convenient operation of the product.

1, 2,3… 1 indicates lists of one sort or another, such as procedures, checklists, etc.

OMRON, 2007

All rights reserved. No part of this publication may be reproduced, stored in a retrieval system, or transmitted, in any form, or by any means, mechanical, electronic, photocopying, recording, or otherwise, without the prior written permission of OMRON.
No patent liability is assumed with respect to the use of the information contained herein. Moreover, because OMRON is constantly striving to improve its high-quality products, the information contained in this manual is subject to change without notice. Every precaution has been taken in the preparation of this manual. Nevertheless, OMRON assumes no responsibility for errors or omissions. Neither is any liability assumed for damages resulting from the user of the information contained in this publication.

Read and Understand this Manual

Please read and understand this manual before using the product. Please consult your OMRON representative if you have any questions or comments.

Warranty and Limitations of Liability

WARRANTRY
OMRON's exclusive warranty is that the products are free from defects in materials and workmanship for a period of one year (or other period if specified) from date of sale by OMRON OMRON MAKES NO WARRANTRY OR REPRESENTATION, EXPRESS OR IMPLIED, REGARDING NONINFRINGEMENT, MERCHANTABILITY, OR FITNESS FOR PARTICULAR PURPOSE OF THE PRODUCTS. ANY BUYER OR USER ACKNOWLEDGES THAT THE BUYER OR USER ALONE HAS DETERMINED THAT THE PRODUCTS WILL SUITABLY MEET THE REQUIREMENTS OF THEIR INTENDED USE. OMRON DISCLAIMS ALL OTHER WARRANTIES, EXPRESS OR IMPLIED.

LIMITATIONS OF LIABILITY
OMRON SHALL NOT BE RESPONSIBLE FOR SPECIAL, INDIRECT, OR CONSEQUENTIAL DAMEGES, LOSS OF PROFITS OR COMMERCIAL LOSS IN ANY WAY CONNECTED WITH THE PRODUCTS, WHETHER SUCH CLAIM IS BASED ON CONTRACT, WARRANTRY, NEGLIGENCE, OR STRICT LIABILITY. In no event shall the responsibility of OMRON for any act exceed the individual price of the product on which liability is asserted. IN NO EVENT SHALL OMRON BE RESPOBSIBLE FOR WARRANTRY, REPAIR, OR OTHER CLAIMS REGARDING THE PRODUCTS UNLESS OMRON'S ANALYSIS CONFIRMS THAT THE PRODUCTS WERE PROPERLY HANDLED , STORED, INSTALLED, AND MAINTENANCED AND NOT SUBJECT TO CONTAMINATION, ABUSE, MISUSE, OR INAPPROPRIATE MODIFICATION OR REPAIR.

Application Considerations

SUITABILITY FOR USE
OMRON shall not be responsible for conformity with any standards, codes, or regulations that apply to the combination of products in the customer's application or use of the products. At the customer's request, OMRON will provide applicable third party certification documents identifying ratings and limitations of use that apply to the products. This information by itself is not sufficient for a complete determination of the suitability of the products in combination with the end product, machine, system ot other application or use. The following are some examples of applications for which particular attention must be given. This is not intended to be an exhaustive list of all possible uses of the products, nor is it intended to imply that the uses listed may be suitable for the products: •Outdoor use, uses involving potential chemical contamination or electrical interference, or conditions or uses not described in this manual. •Nuclear energy control systems, combustion systems, railroad systems, aviation systems, medical equipment, amusement machines, vehicles, safety equipment, and installations subject to separate industry or government regulations. •Systems, machines, and equipment that could present a risk to life or property. Please know and observe all prohibitions of use applicable to the products. NEVER USE THE PRODUCTS FOR AN APPLICATION INVOLVING SERIOUS RISK TO LIFE OR PROPERTY WITHOUT ENSURING THAT THE SYSTEM AS A WHOLE HAS BEEN DESIGNED TO ADDRESS THE RISKS, AND THAT THE OMRON PRODUCTS ARE PROPERLY RATED AND INSTALLED FOR THE INTENDED USE WITHIN THE OVERALL EQUIPMENT OR SYSTEM.

PROGRAMMABLE PRODUCTS
OMRON shall not be responsible for the user's programming of a programmable products, or any consequence thereof.

Disclaimers

CHANGE IN SPECIFICATIONS
Products specifications and accessories may be changed at any time based on improvements and other reasons. It is our practice to change model numbers when published ratings or features are changed, or when significant construction changes are made. However, some specifications of the products may be changed without any notice. When in doubt, special model numbers may be assigned to fix or establish key specifications for your application on your request. Please consult with your OMRON representative at any time to confirm actual specifications of purchased products.

DIMENSIONS AND WEIGHTS
Dimensions and weights are nominal and are not to be used for manufacturing purposes, even when torelances are shown.

PERFORMANCE DATA
Performance data given in this manual is provided as a guide for the user in determining suitability and does not constitute a warrantry. It may represent the result of OMRON's test conditions, and the users must correlate it to actual application requirements. Actual performance is subject to the OMRON Warrantry and Limitations of Liability.

ERRORS AND OMISSIONS
The information in this manual has been carefully checked and is believed to be accurate; however, no responsibility is assumed for clerical, typographical, or proofeading errors, or omissions.

TABLE OF CONTENTS

Introduction 1

About this Manual 2

About Loop Controllers 4

Notice: 5

Read and Understand this Manual 6

SECTION 1
Outline of PLC-based Process Controller

1-1 Features of PLC-based Process Control 1-1
1-2 Point of Loop Controller 1-3
1-3 Internal Mechanism of Loop Controller 1-4
1-4 Outline Outline of Procedures to build PLC-based Process Control System 1-5

SECTION 2
Procedures to Build PLC-based Process Control System

2-1 Design 2-1
2-2 Setting up the Hardwares. 2-13
2-3 Initial Setting of PLC on CX-Programmer. 2-15
2-4 Programming Offline for Loop Controller. 2-25
2-5 Transferring the program to the Loop Controller. 2-41
2-6 Test Run with CX-Process Tool. 2-45
2-7 Creating Monitor Screen for NS Series PT. 2-59

SECTION 3
Appendix

3-1 HMI Function 3-1
3-2 Connections via Ethernet 3-5
3-3 Monitoring by CX-Process Monitor Plus 3-12
3-4 Scaling 3-37
3-5 Order of Operations 3-42
3-6 Load Rate of the Loop Controller 3-43
3-7 External I/O Response Time 3-45
3-8 Errors and Alarm Troubleshooting 3-46
3-9 Contents of a CSV Tag File 3-54
3-10 List of Function Blocks 3-56

SECTION 4

TABLE OF CONTENTS

Application Cases

4-1 Cascade Control 4-1
4-2 Split Control 4-7
4-3 Position-propotional Control (Motor Opening Manipulator) 4-11
4-4 Process Control with Dead Band (Sample PI Control) 4-14
4-5 Proccess Control with Dead Band (Smith Dead Time Compensation Control) 4-17
4-6 Temperature and Pressure Correction (Vortex Flowmeter) 4-20
4-7 Temperature and Pressure Correction (Differential Pressure Flowmeter) 4-24
4-8 Temperature and Pressure Correction (Variable Area Flowmeter) 4-27
4-9 Average Temperature Control for Constant Temperature Bath (With bias for input and output) 4-30
4-10 Average Temperature Control for Constant Temperature Bath 4-34
4-11 Calorie Control of Mixed Gas 4-38
4-12 Neutralizing of Acid Discharged Water 4-42
4-13 Arithmetic Operation (Addition or Subtraction) 4-45
4-14 Arithmetic Operation (Division) 4-48
4-15 Arithmetic Operation (Multiplication) 4-51
4-16 Arithmetic Operation (Average Value) 4-54
4-17 Time-proportional Output Controller 4-57
4-18 Neutralization Control (Acid and Alkali Control) 4-59
4-19 Electric Valve Control by Electric Positionner 4-63
4-20 Dead Band Control (With Deviation Alarm) 4-64
4-21 Flow Rate Control 4-66

SECTION 1
Outline of PLC-based Process Controller

1-1 Features of PLC-based Process Control 1-1

1-1-1 Outline 1-1

1-1-2 Features 1-2

1-1-3 Basic System Configuration 1-2

1-2 Point of Loop Controller 1-3

1-3 Internal Mechanism of Loop Controller 1-4

1-3-1 Loop Controller Mechanism 1-4

1-4 Outline Outline of Procedures to build PLC-based Process Control System .. 1-5

1-1 Features of PLC-based Process Control

1-1-1 Outline

The PLC-based Process Control is a process control system which is built on the base of CS/CJ series PLC. Loop control functions can be added on the base of general PLC function, by mounting the PLC-based Process Control components. The basic functionality of the PLC can be utilized, too.

In the PLC-based Process Control system, the Loop Controller handles analog operation and CS/CJ series PLC CPU Unit handles ladder operation. Data exchange between the Loop Controller and CPU Unit is executed through the data table in the memory area.

The operation processing of analog control and ladder operation are separately handled. Therefore, the program can be simpler compared with the program which is built by only ladder program. This feature will contribute to reduce bugs because engineering to build the system becomes easier.

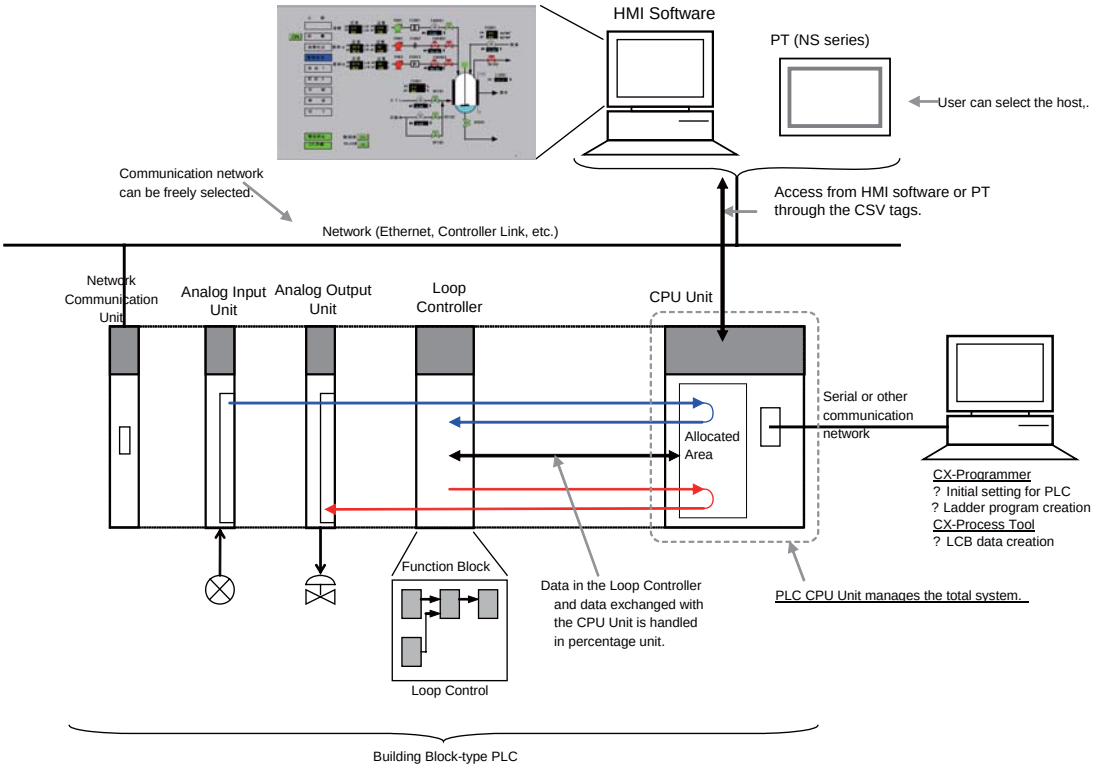

1-1-2 Features

- PLC CPU Unit manages the total system.
- Loop Controller, analog I/O unit, and contact I/O unit can be selected and mounted on this building block-type PLC system.
- Communication type to connect with host system (HMI software, PT, etc.) can be freely selected from Ethernet, Controller Link, Serial communication, and etc.
- The Loop Controller has the Function block data in it, and peforms loop operation.
- Analog data in the Loop Controller is handled in percentage unit, not in engineering units.
- Loop Controller automatically exchanges the data in percentage unit with HMI data area (allocated area in the CPU Unit).
- Based on the CSV Tag File (corresponding table of tags and allocated area address in the CPU Unit with setting data for scaling, etc.), HMI software and special monitoring software (CX-Process Monitor Plus) can access to the HMI data area. (Analog data is converted from percentage unit into the engineering unit depending on the scaling setting which is set with other tag data).
- For NS series PT, screen data can be automatically created from the CSV Tag file by Face Plate Auto-Builder for NS (automatic screen creation software).

1-1-3 Basic System Configuration

1.Unit Having External Interface Functions

The Loop Controller itself does not have external analog I/O and external contact I/O functions. So, it must be used in combination with a Unit as shown in the example figures below.

2.CX-Process Tool

The Loop Controller itself does not have a HMI for preparing function block data. So, function block data must be prepared on CX-ProcessTool, and then downloaded to the Loop Controller for use as shown in the example figures below.

3.HMI Software

The Loop Controller itself does not have a HMI for setting the Set Point and PID constant values, and displaying the PV. So, the Set Point and PID constant values must be set, and PV monitored using HMI software or a PT (Programmable Termnal).

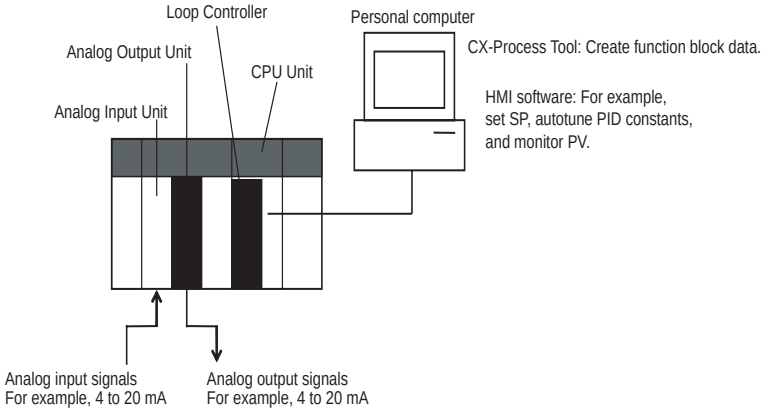

1-2 Point of Loop Controller

Loop Controller handles analog data in percentage unit.

The Loop Controller handles analog I/O signals in percentage unit (-15.00 to +115.00%, -320.00 to +320.00%).Values in percentage unit can be converted into the engineering units by the HMI software, and PT. The scaling data is determined depending on the settings called "CSV tags". (HMI software and NS series PT can acquire scaling settings by importing this CSV tags).

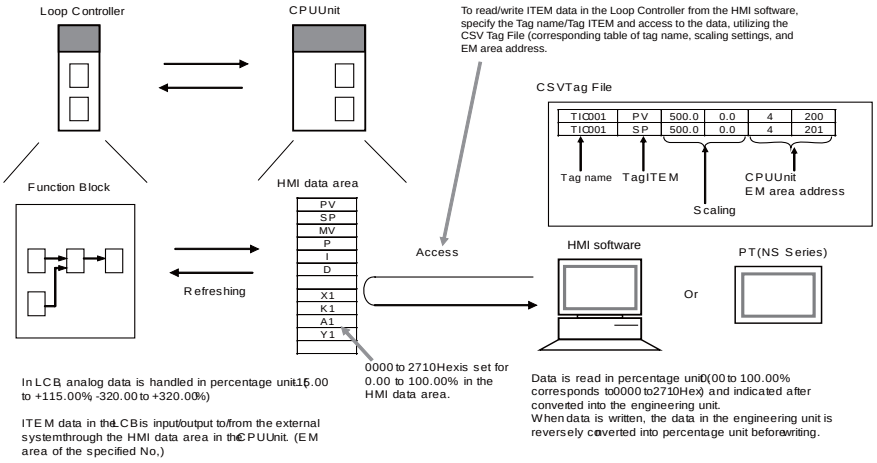

Example1: At analog input, the converted values 0000 to 0FA0 (FF38 to 1068) Hex from the Analog Input Unit for input 4 to 20 mA (3.2 to 20.8 mA) are converted to 0.00 to 100.00% (-5.00 to 105.00%) before they are processed by the Loop Controller.
Example2: At analog output, the values 0.00 to 100.00% (-5.00 to 105.00) are converted to setting value 0000 to 0FA0 (FF38 to 1068) Hex before 4 to 20 mA (3.2 to 20 mA) is output from the analog Output Unit.
Example3: At input from the CPU Unit, the values of 0000 to 0FA0 Hex in the I/O memory words are converted to 0.00 to 100.00% before they are input to the Loop Controller, when the range 0 to 4000 (0000 to 0FA0 Hex) is specified.
Example4: At output to the CPU unit, the values of 0 .00 to 100.00% are converted to 0000 to 0FA0 Hex before they are output to the I/O memory when the range 0 to 4000 (0000 to 0FA0 Hex) is specified.

Refer to ***Appendix3-4 Scaling*** for the scaling in the PLC-based Process Control system.

1-3 Internal Mechanism of Loop Controller

1-3-1 Loop Controller Mechanism

Loop Controller Mechanism

The program of the Loop Controller can be built by combining operation loops called Function block.CX-Process Tool is utilized for the programming of Loop Controller.The following illustration shows the image of the overall mechanism.

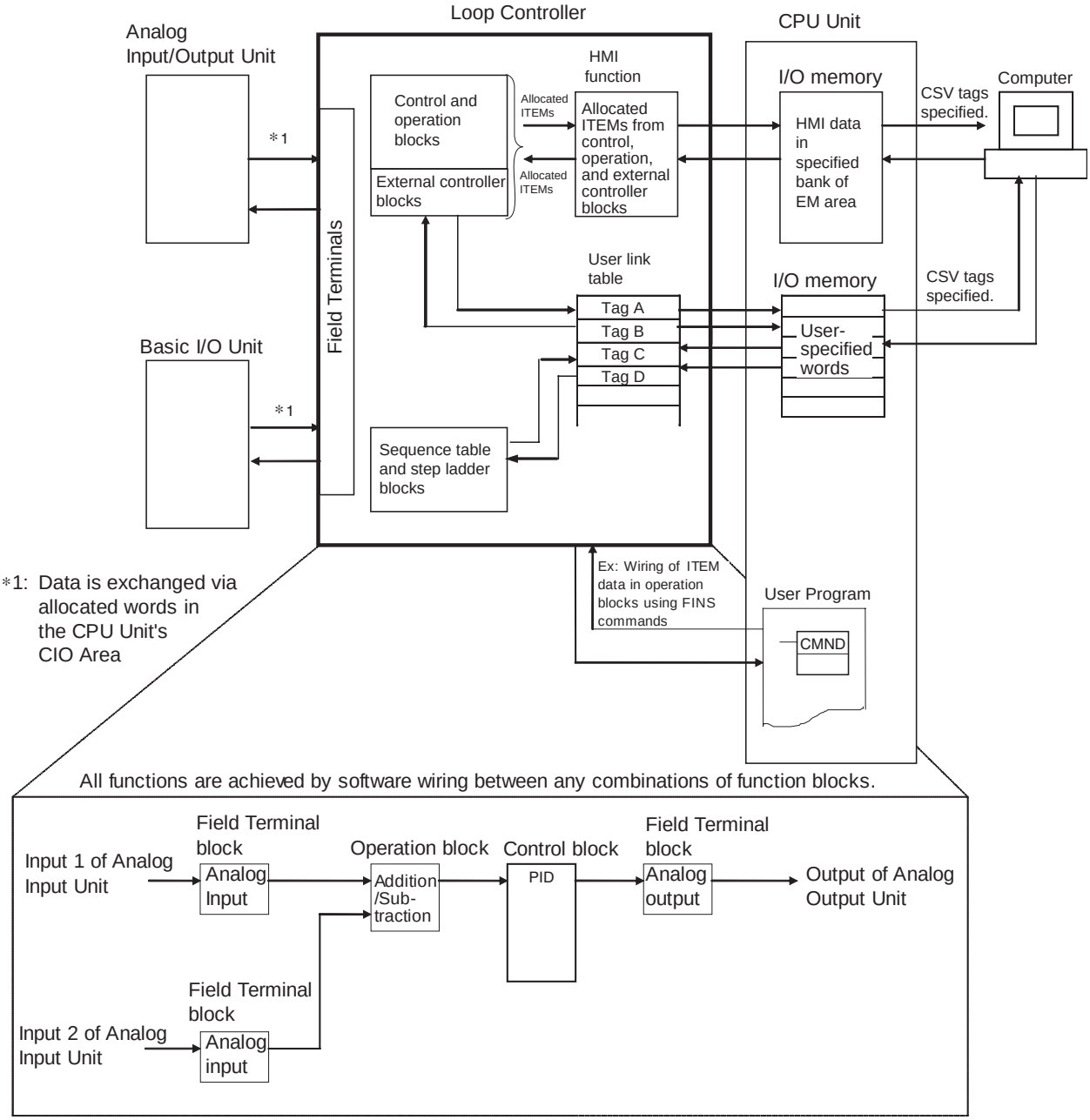

Note: The functions differ with the Loop Controller models.

1-4 Outline Outline of Procedures to build PLC-based Process Control System

Step 1. Design: In this section, determine the system configuration of PLC-based Process Control System. 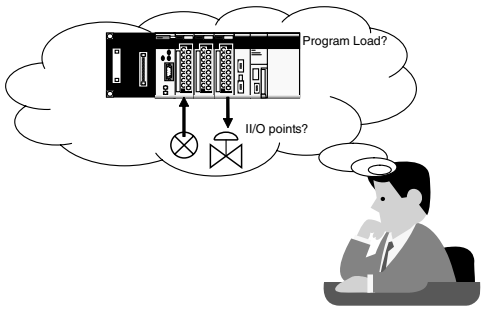 	P.2-1

Step2. Setting up the Hardwares: Set the hardwares of PLC-based Process Control System following the procesure in this section. 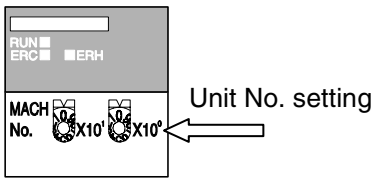 	P.2-13

Step3. Initial Setting of PLC on CX-Programmer: This section describes the software settings of the PLC-based Process Control System. The procedure to create a new project and I/O table. Utilized software: CX-Programmer 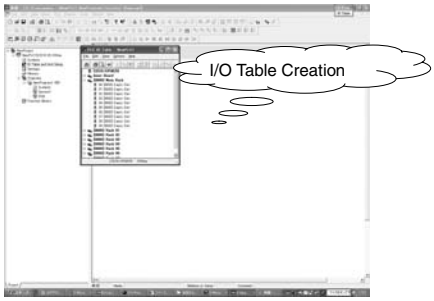 	P.2-15

Step4. Programming Offline for Loop Controller: Before setting up the actual system, build a program for the Loop Controller on the CX-Process Tool. Utilized software: CX-Process Tool 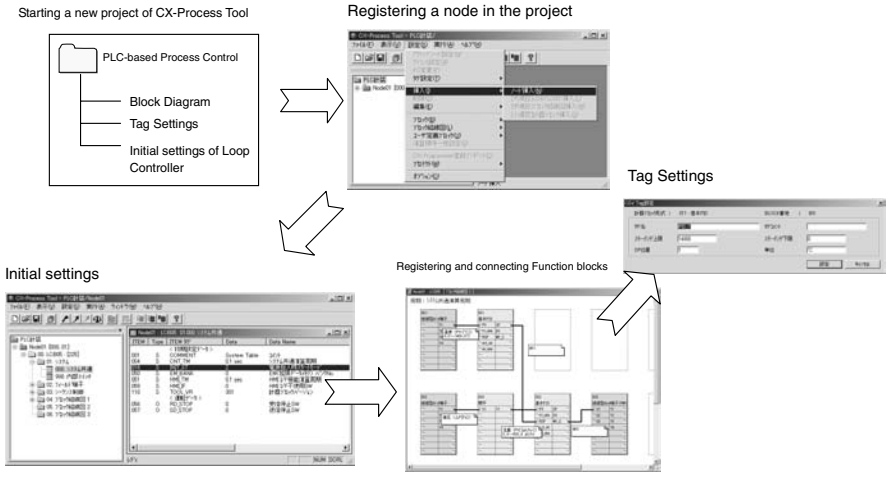 	P.2-25

Step 5. Transferring the program to the Loop Controller: Download the program created in Step 2 to the Loop Controller. Utilized Software: CX-Process Tool 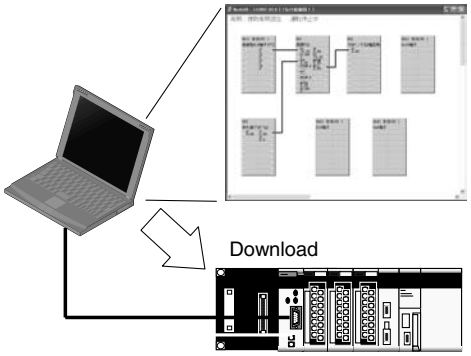 	P.2-41

Step 6. Test Run with CX-Process Tool: Run the downloaded Loop Controller program. Utilized Software: CX-Process Tool	P.2-45

Step 7. Creating Monitor Screen for NS Series PT: Monitor the data which is handled by the Loop Controller utilizing graphical interface, such as HMI software and PT. Utilized Software: For NS Series PT: CX-Process Tool - Face Plate Auto-builder for NS - CX-Designer For CX-Process Monitor Plus: CX-Process Tool - CX-Process Monitor Plus 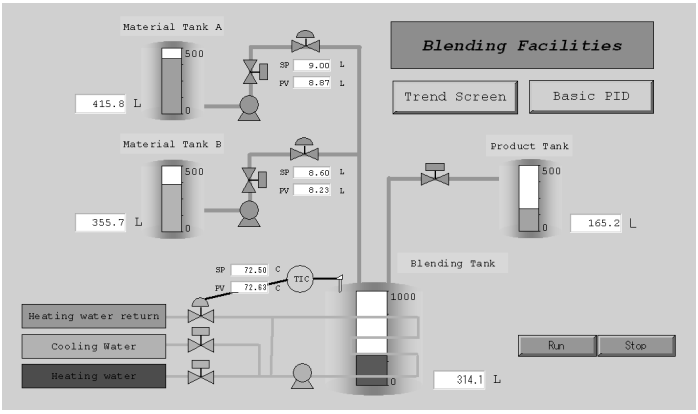 	P.2-59

SECTION 2
Procedures to Build PLC-based Process Control System

2-1 Design 2-1

2-1-1 Determining the System Configuration 2-1

2-1-2 System Example 2-5

2-2 Setting up the Hardwares. 2-13

2-3 Initial Setting of PLC on CX-Programmer. 2-15

2-4 Programming Offline for Loop Controller. 2-25

2-5 Transferring the program to the Loop Controller. 2-41

2-6 Test Run with CX-Process Tool. 2-45

2-7 Creating Monitor Screen for NS Series PT. 2-59

2-1 Design

2-1-1 Determining the System Configuration

This chapter describes the example to build a one-loop system which executes Ramp Program control and simple sequence control on a CJ Series Loop-control CPU Unit.
Determine the following configuration below.

Input and Output of the system

In the PLC-based Process Control System, external analog signals are taken into the system from "Analog I/O Unit (Special I/O Unit)" to "Field Terminal Function block" in the Loop Controller. External contact signals are taken into the system from "Digital Contact I/O Unit (Basic I/O Unit)" to "Field Terminal Function block".
In the internal processing of PLC-based Process Control system, the data is exchanged between the Loop Controller and CPU Unit through the User Link Table.

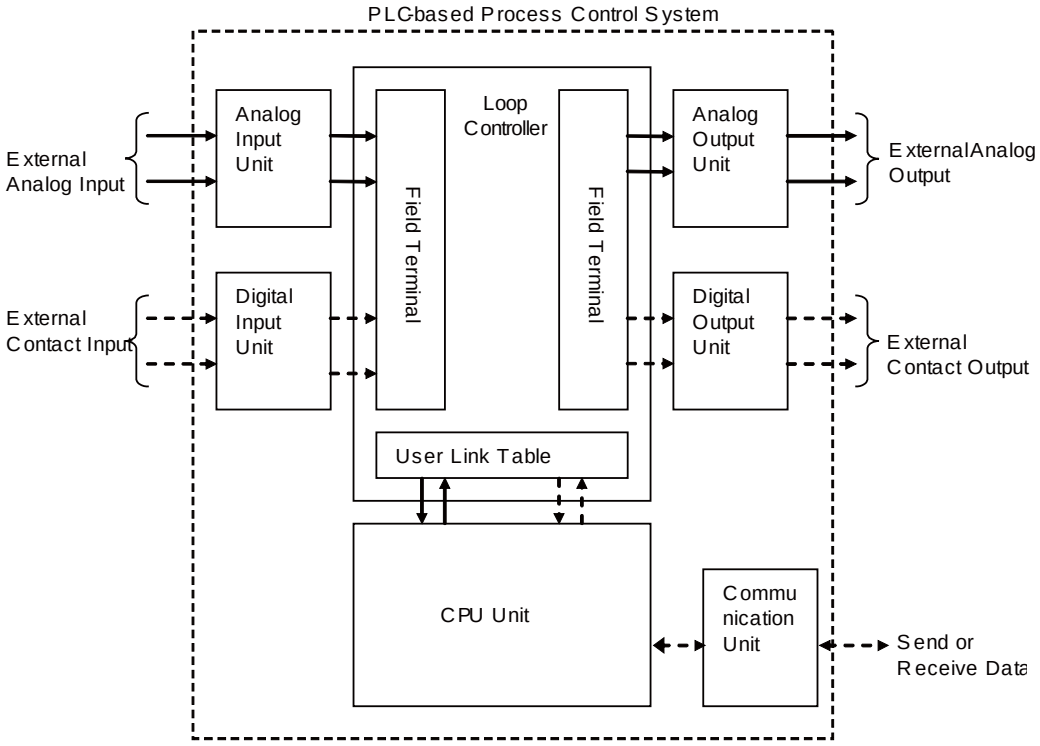

For Input and Output, determine the following:

Type and Number of External Analog I/O

Determine the analog signal types.

Determine the necessary analog input/output number and how many of them will be controlled by the Loop Controller.

PLC Analog Input/Output Unit and the number of the units can be decided, depending on the analog input/output signal type and number. Below is the list of analog I/O units.

♦CJ series Special I/O Unit

Unit	Specification	Type	Block Name
Analog Input/Output Unit	4 inputs (1 to 5 V, 4 to 20 mA, etc.) 2 outputs (1 to 5 V, 0 to 10V, etc.)	CJ1W-MAD42	Ai4-point/Ao2-point Terminal (Block Model 592)
Analog Input Unit	4 inputs (1 to 5 V, 4 to 20 mA, etc.)	CJ1W-AD041-V1	Ai4-point Terminal (Block Model 586)
	8 inputs (1 to 5 V, 4 to 20 mA, etc.)	CJ1W-AD081-V1	Ai8-point Terminal (Block Model 584)
Analog Output Unit	4 outputs (1 to 5 V/ 4 to 20 mA, etc.)	CJ1W-DA041	Ao4-point Terminal (Block Model 587)
	8 outputs (1 to 5 V, etc.)	CJ1W-DA08V	Ao8-point Terminal (Block Model 585)
	8 outputs (4 to 20 mA)	CJ1W-DA08C	Ao8-point Terminal (Block Model 585)
	2 outputs (1 to 5 V/ 4 to 20 mA, etc.)	CJ1W-DA021	Ao2- point Teminal (Block Model 591)
Isolated-type Thermocouple Input Unit	4 inputs (B, E, J, K, L, N, R, S, T, U, WRe5-26, PLII, mV)	CJ1W-PTS51	Ai4- point Terminal (Block Model 566)
	2 inputs (B, E, J, K, L, N, R, S, T, U, WRe5-26, PLII)	CJ1W-PTS15	Ai2- point Terminal (Block Model 571)
Isolated-type Resistance Thermometer Input Unit	4 inputs (Pt100, JPt)	CJ1W-PTS52	Ai4- point Terminal (Block Model 567)
	2 inputs (Pt100, JPt100, Pt50, Ni508.4)	CJ1W-PTS16	Ai2- point Terminal (Block Model 571)
Isolated-type DC Input Unit	2 inputs (1 to 5 V, 4 to 20 mA, etc.)	CJ1W-PDC15	Ai2-point Terminal (Block Model 571)

♦Other Input/Output Unit

Analog signals of Analog I/O Unit for which Field Terminal Block is not prepared (DeviceNet DRT2 Analog Terminal, etc.) can be taken in through "User Link Table".

User Link Table is utilized when data is exchanged between the CPU Unit and Loop Controller. The input value of DRT2 Analog Terminal is taken into the memory area of the CPU Unit; therefore, the Loop Controller can acquire the input data through the User Link Table.

Number of external contact I/O points used for the system

Determine the necessary contact input/output number and how many of them will be controlled by the Loop Controller.

Number of analog/contact I/O points used on the Loop Controller

How many analog/contact signal data will be exchanged between the Loop Controller and CPU Unit in the inner processing of PLC-based Process Control System?
"User Link Table", the table through which LCB can exchange data with CPU Unit enables programming for the Loop Controller, such as wiring Function blocks and creating sequence table without knowing the I/O Memory address in the CPU Unit.

Current Consumption

Confirm if the current consumption of the Units mounted on the rack is less than the current capacity of the Power Supply Unit.

Evaluation of Load Rate

The Loop Controller cyclically processes operation of its own function blocks asynchronously with I/O refreshing of the CPU Unit. The cycle by which operations are processed, or the "operation cycle," is dependent on the type and number of function blocks used.
For this reason, when many function blocks whose operation takes a long time to process are used, the actual operation cycle of the entire Loop Controller or an individual function block increases. As a result, the desired preset operation cycle sometimes cannot be satisfied.
The ratio between the actual execution time required for processing operation and the preset operation cycle is called the "load rate." The maximum values and current value of each operation cycle group can be confirmed on CX-Process Tool. A load rate of 80% or less is required in all operation cycle groups on this Loop Controller.
The High Load Alarm Flag (A42408) turns ON if the load rate exceeds 80% for 6 seconds. If this happens, select the function blocks that can have longer operation cycles and increase their operation cycles. If the load rate is still too high, add on a CPU Unit or a CPU Unit and a Loop Control Unit and distribute function block processing between the mounted Units.

Maximum number of loops

The load rate of the Loop Controller should be 80% or less; therefore, in general cases, such as when each loop consists of an Ai4-point Terminal, a Segment Linearizer, a Basic PID, and an Ao4-point Terminal block, the maximum number of control loops would be as shown in the following tables.

Loop-control CPU Units CJ1G-CPU43P/44P/45P (LCB03)

Operation cycle	Maximum number of loops	Operation cycle	Maximum number of loops	Operation cycle	Maximum number of loops
0.01s	20 loops	0.02 s	35 loops	0.05 s	70 loops
0.1 s	100 loops	0.2 s	150 loops	0.5 s	150 loops
1 s	150 loops	2 s	150 loops		

CJ1G-CPU42P (LCB01)

Operation cycle	Maximum number of loops	Operation cycle	Maximum number of loops	Operation cycle	Maximum number of loops
0.01 s	20 loops	0.02 s	25 loops	0.05 s	25 loops
0.1 s	25 loops	0.2 s	25 loops	0.5 s	25 loops
1 s	25 loops	2 s	25 loops		

Evaluation of External I/O Response Cycle (Dependent on CPU Unit's Cycle Time)

The operating speed (operation cycle) itself of each function block on the Loop Controller is not related to the CPU Unit's cycle time. However, as the CPU Unit's I/O memory is accessed during data exchange, for example, between Analog I/O Units and the Basic I/O Unit, the timing of data exchange is greatly influenced by the CPU Unit's cycle time.

The external analog I/O response cycle (equivalent to the I/O response cycle on a general controller) when the Loop Controller is configured as part of an instrumentation system is not the same as the operation cycle of the function blocks; but is a cycle heavily dependent on the CPU Unit's cycle time.

Total time of input conversion time, ladder cycle time, Loop Controller operation cycle and output conversion time is equal to operation cycle of a controller.

So, when determining the system configuration, calculate how long the external analog I/O response cycle will be within the instrumentation system based upon factors such as the CPU Unit's cycle time and the operation cycles of the Loop Controller's function blocks. Also, assess whether or not there will be any problems when running applications at the analog I/O response cycle that you have calculated.

2-1-2 System Example

System Configuration

Execute Time-sharing proportional temperature control with the PV input of temperature and control object of SSR.
Input the RSP from the Ramp Program as a SP of the temperature control.
Configuration, monitoring, and tuning can be executed on the NS series PT (programmable terminal) sceens for the Loop Controller through Ethernet.
Initial setting and process programming are executed by CX-Process Tool installed on the personal computer which is coneected by serial communication.

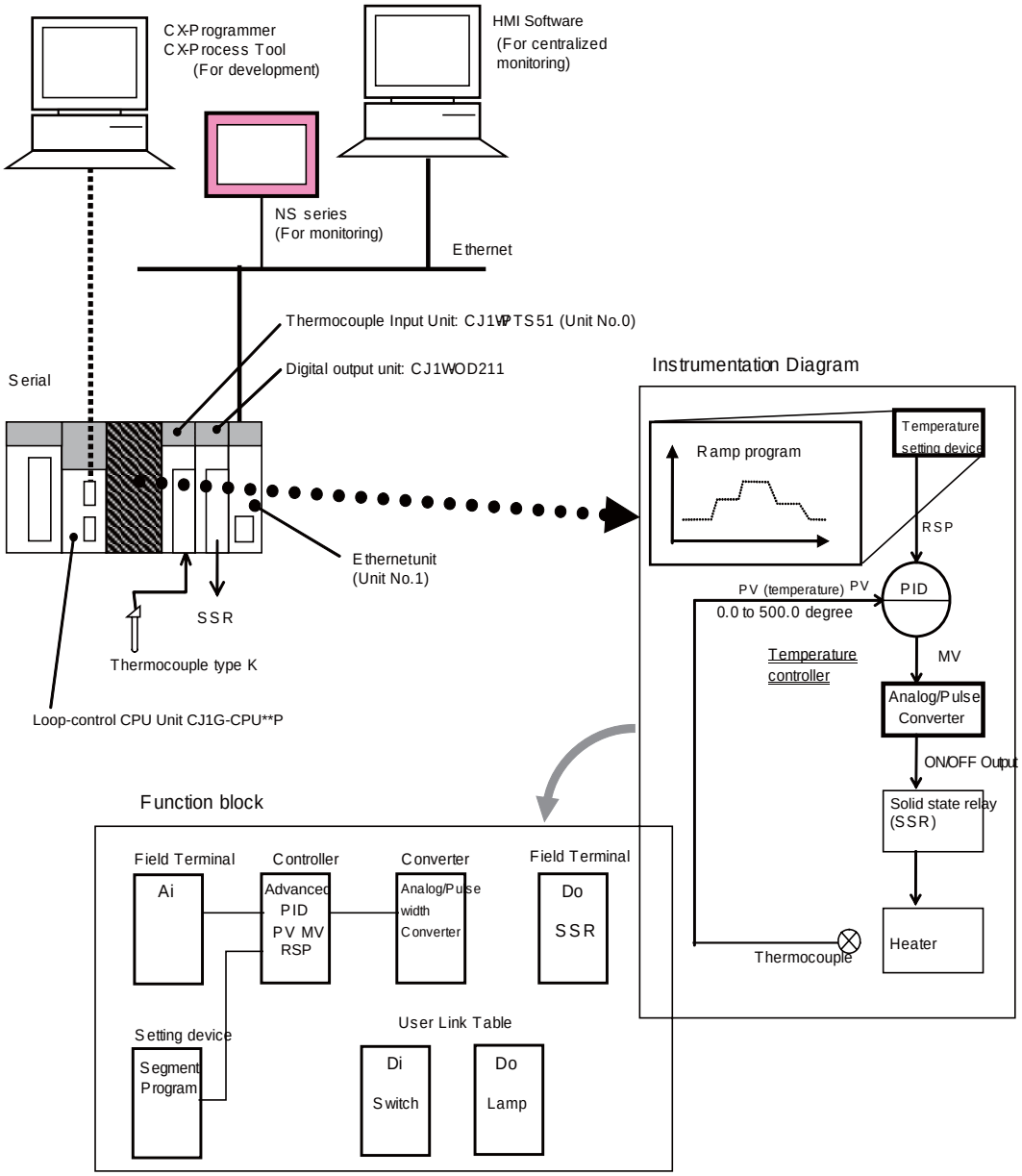

* The switch and lamp controls internal contact.

Details of the control

Build control system described below.

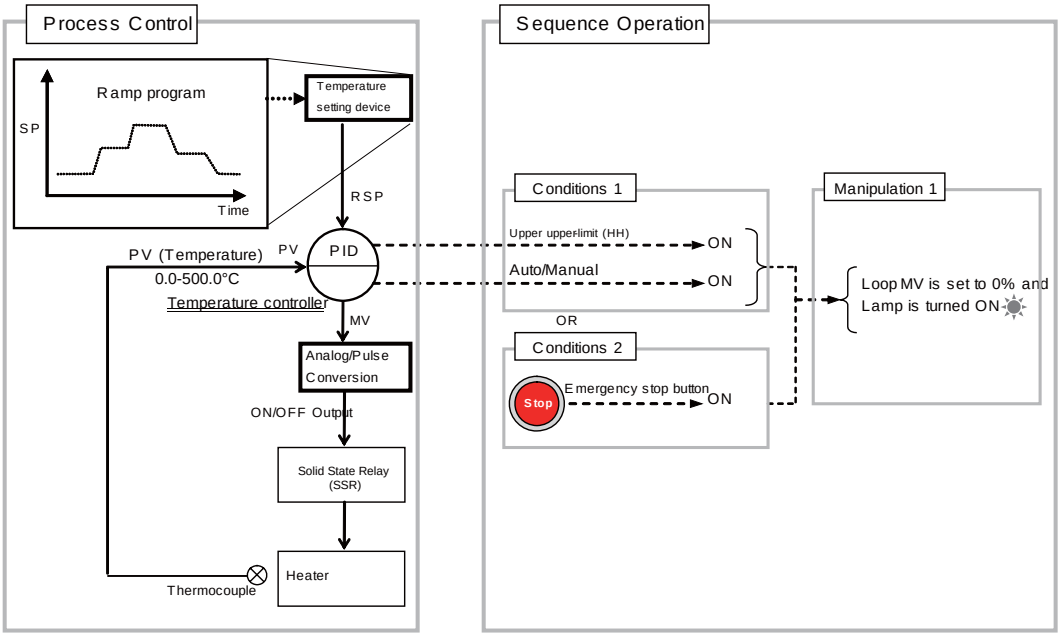

◆Loop Control

Temperature control of time-sharing proportional PID is peformed according to the Segment Program. The SP is changed at the time set in the Segment Program.
Analog signal (MV) from PID is converted into time-sharing ON/OFF signal by Analog/Pulse Width Converter to control a heater by operating SSR which is controlled by contact signal (transistor) to which voltage is applied from external source.

◆Sequence Control

Pepare the program for a simple sequence control operation below.
Operation 1 described below is performed when Condition1 or Condition2 is met.

Condition1: (When both of the two conditions below are met.)

- High High Limit alarm (HH) output of the temperature controller is ON.
- Auto is selected for Auto/ Manual

Condition 2

- Emergency stop button is turned ON. (Internal contact allocated in the PLC I/O Memory)

Operation 1

- MV is set to 0%.
- The lamp is turned ON.(Turn ON the internal contact allocated in the PLC I/O Memory).

◆Units used in this system

Connected Device	Unit	Model	Unit Type	Unit No. for ientification	Terminal which is connected.
-	CJ series Loop-Control CPU Unit	CJ1G-CPU4*P	CPU Unit with Pre-installed Loop Controller	-	
Thermocouple (K-type)	Thermocouple Input Unit	CJ1W-PTS51	Special I/O Unit	Unit No.0	Input No.1
Solid State Relay (SSR)	Output Unit	CJ1W-OD211	Basic I/O Unit		Output No.1
Ethernet to Personal Computer	Ethernet Unit	CJ1W-ETN21	CPU Bus Unit	Unit No.1	

◆Function blocks used in this system

Function Block	Type	Block Model	Block Name
Program setting	Operation Block	157	Segment Program 2
Thermocouple Input	Field Terminal	566	Ai4-point Terminal (PTS51)
PID operation	Control Block	012	Advanced PID
Analog/Pulse Width Converter (Analog Input ON/OFF period ratio conversion)	Operation Block	192	Analog/Pulse Width Converter
Digital Output	Field Terminal	514	Do16-point Terminal (OD211)
Sequence Operation	Sequence Control	301	Step Ladder

MEMO: Execution order of Function Block

The execution proceeds in the following order: Field Input Terminal, Control/Operation Block (in the order of Block Address *1), Field Output Terminal.

*1: User defined order can be set for the execution (Specify the execution order in ITEM005: Execution order). It is also possible to execute the program in the order of location on the Block Diagram. (Select Settings - Setting Operation Order).

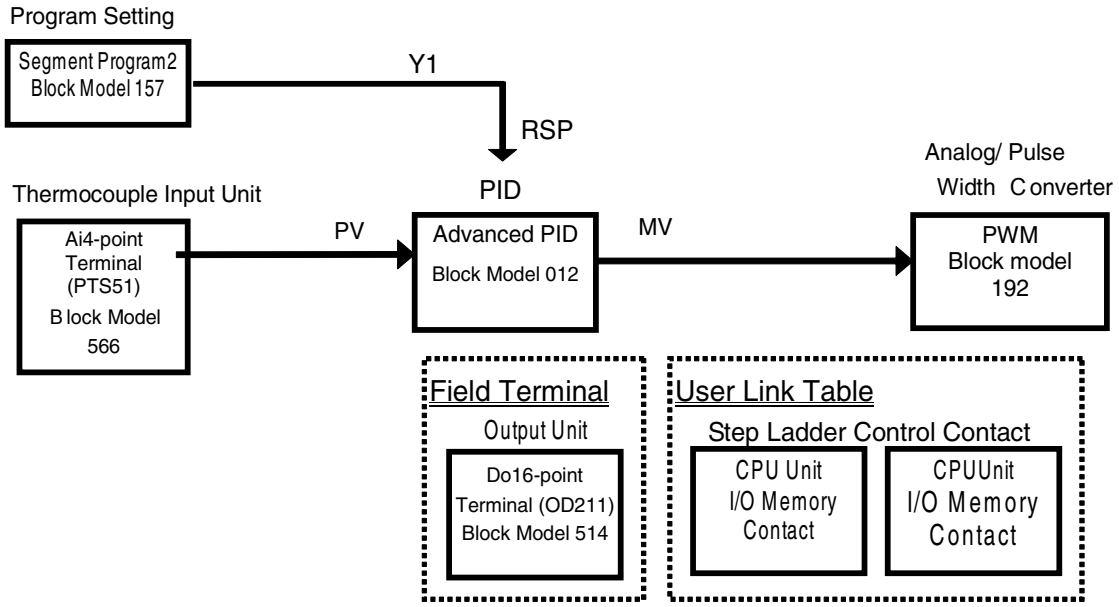

Details of the Sequence Operation

Loop Controllers can perform sequence control based on its "Sequence Table" or "Step Ladder". However, only "Step Ladder" can be utilized for the Loop-control CPU Unit.

◆Sequence Logic 1

•Conditions

Condiitons	Data for Condition Judgement
High/High Limit alarm (HH) output of Temperature Controller is ON	PID ITEM013 (High/High Limit (HH) Alarm output) is ON
Auto is set in Auto/ Manual	PID ITEM086 (A/M switch)=ON

•Manipulation

Manipulaton	Value to be Manipulated
Set MV to 0%.	PID ITEM080 (Preset MV switch) = ON PID1 ITEM081 (Preset MV value) is set to 0, before.
Turn ON the Lamp.	0100CH 00 bit (Internal contact allocated in the PLC I/O Memory) = ON

◆Sequence Logic 2

•Conditions

Conditions	Data for Condition Judgement
Emergency Stop Button is ON	0200CH 00 bit (Internal contact allocated in the PLC I/O Memory) is ON.

♦Manipulation

Manipulaton	Value to be Manipulated
Set MV to 0%.	PID ITEM080 (Preset MV switch) = ON PID1 ITEM081 (Presset MV value) is set to 0, before.
Turn ON the Warning Lamp.	0100CH 00 bit (Internal contact allocated in the PLC I/O Memory) = ON

◆Explanation of Step Ladder

Sequence operation can be programmed in Ladder language for the Loop Controller.
Step Ladder is programmed in the Function block of Block Model 301. Maximum 200 blocks can be pasted (Allocated to Block address 701 to 900).
The Step Ladder Program block is used in the following cases:

♦When logical operations such as AND, OR and NOT are to be performed on the Loop Controller
♦When input of changes in the contact state (OFF to ON or ON to OFF) are to be converted to one-shot contact outputs that are ON for only one operation cycle
♦When system contacts such as constantly ON contacts are to be used on the Loop Controller
♦When step progression control, for example, is to be performed on the Loop Controller

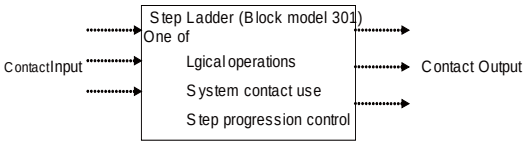

♦ITEMs that can be specified by sequence commands are ITEMs whose ITEM category is "contact input" or "contact output." For details, see the Setting Method item in the ITEM lists in the descriptions for each function block.

Command type	Settable ITEM type	"According to Step Ladder Program" at "Settable Method" Item
Input type commands such as LOAD	Contact output	R (read-enabled)
	Contact input	R/W (read/write-enabled)
Output type commands such as OUT	Contact input	

NOTE:

Stap ladder can be used to execute sequence control which is necessary for the loop control. It is useful to use step ladder for switching auto/ manual or alarm handling. Step ladder is not suitable for high speed or complex sequence control. For high speed or complex sequence control applications, use ladder proram of the CPU Unit.

User Link Table used in this system

Data Writing Direction	Tag Name	I/O Memory Address of CPU Unit
CPU Unit to Loop Controller	Emergency Stop	200.00
Loop Controller to CPU Unit	Lamp	100.00

◆Explanation of the User Link Table

The User Link Table is a table in the Loop Controller that is used to exchange data with the CPU Unit.

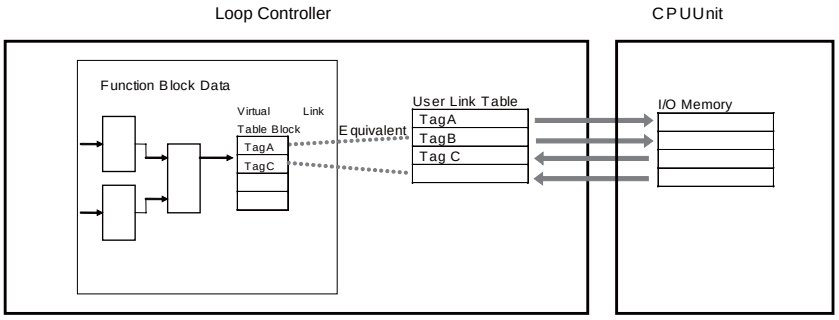

Set the necessary data in each line, including the user-defined tag name and other parameters such as the CPU Unit's I/O memory address, 0%/100% scaling values, refresh period, and function block ITEMs to be read/ written.
Each tag can read or write data in the specified CPU Unit I/O memory for the specified conditions. It is also possible to exchange data regularly or refresh a particular function block's ITEM data when there is a change in the CPU Unit's I/O memory. Up to 2,400 tags can be created.

Use the CX-Process Tool to register tags in the User Link Table.
Once the tags have been registered in the User Link Table, the tag names can be used in Loop Controller programming such as connections or sequence tables, so it isn't necessary to know the specific CPU Unit I/O memory addresses associated with each tag when programming.
The User Link Table can also be pasted in a block diagram as a virtual function block.

Scaling

♦PID: 0.0 to 500.0°C

MEMO: Scaling performed by the Loop Controller
Analog data in the Loop Controller is handled in percentage unit (0 to 100.0%).
In Loop Controller, scaling data can be set for each Function block. The scaling data is included in CSV tags. HMI software or PT utilizes the CSV tags for communication with the CPU Unit.
Exaple: For PID Function block, scaling settings for SP and PV is common.
Refer to ***Appendix3-4 Scaling***.

Conditions

♦Operation cycle: 0.1 s
♦Start Mode at power ON: Cold start
♦EM bank No.0 is utilized for HMI data area
♦HMI Function operation cycle: 0.1 s

NOTE:

Operation Cycle

All of the function blocks (for example, all Field Terminals and the Step Ladder Program block) on the Loop Controller are executed cyclically.

Basically, all function blocks (including the Step Ladder Program block) are executed at a default common operation cycle of one second that is set in the System Common block (Block Model 000). (There are some function blocks whose operation cycle is set to not common operation cycle but 1 s.)

To change the system common operation cycle to a value other than one second, set one of the following values to the system common operation cycle (ITEM004) of the System Common block (Block Model 000).

1: 0.1 sec, 2: 0.2 sec, 3: 0.5 sec, 4: 1 sec, 5: 2 sec (default is 4: 1 sec)

When changing the operation cycle of a specific function block, change ITEM004 (operation cycle) of the respective function block to one of 1: 0.1 sec, 2: 0.2 sec, 3: 0.5 sec, 4: 1 sec, 5: 2 sec, 6: 0.01 sec, 7: 0.02 sec, or 8: 0.05 sec from the default "0: common to each block."

NOTE:

Start Mode at Power ON

There are three ways that the Loop Controller can start operation: a hot start, a cold start and a hot start within specified time. With the default settings, the Loop Controller will perform a hot start when the power is turned ON or the Loop Controller is restarted. To start operation in hot start within specified time when the power is turned ON or the Loop Controller is restarted, set "0" (hot start within specified time) to the ITEM018 of the System Common Block (Model000). To start operation in cold start, set "2" (cold start) to the ITEM018 of the System Common Block (Model000).

♦Hot start within specified time

When operation is started in hot start mode (ITEM018 = 0), a hot start is performed after recovering from a power interruption if the time that power is interrupted is a within the time specified in ITEM037 (Hot start enabled time: 0 to 3,600 s (1 hour)). Cold starts are performed if power is interrupted for longer than this time.

♦Cold start

Use the cold start method when it isn't necessary to continue operation with the same values that existed before the power was turned OFF and it is acceptable for the Board to start operation with the following settings: Local Set Point, MV = 0, and Manual mode.

♦Hot start

Use the hot start method when it is preferable to continue operations after a short power interruption or it is necessary to use the same Remote/Local setting, MV output value, and Auto/Manual setting that existed before the power went OFF.

Hot starts are not performed and cold starts are performed after power interruption of 24 hours.

NOTE:

HMI Function

The HMI function constantly allocates ITEM data (20 words/ Block) for the Control/Operation Block, External Control Block, and System Common Block. The ITEM data is allocated in the specified EM bank in the CPU Unit in the same order as the function block addresses.

HMI software and PT read/ write the ITEM of Control/Operation Block, External Control Block, and System Common Block via this allocated HMI I/Fdata area.
See ***Appendix3-1 HMI Function*** for reference.

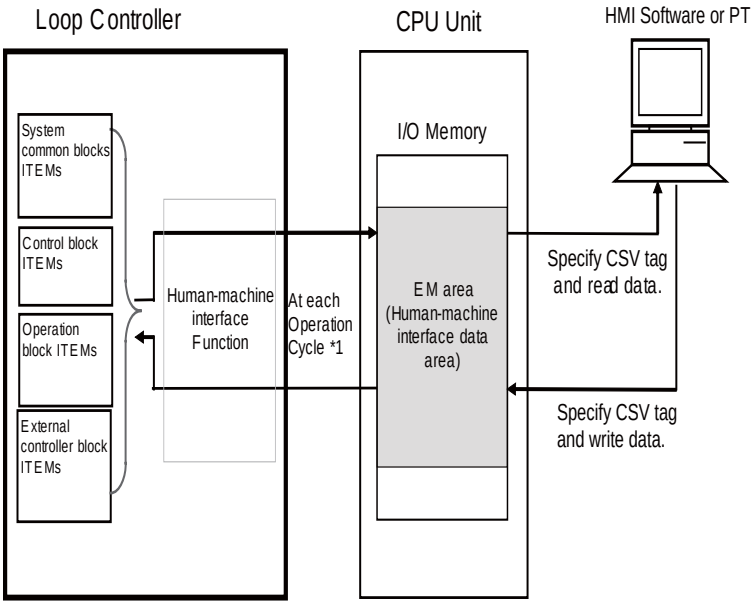

*1: Specify the human-machine interface function's operation cycle time (in seconds) with ITEM 051 of the System Common Block (Block model 000).

- The EM bank number where the ITEM data is allocated (known as the HMI data area) is specified by ITEM050 of the System Common Block (block model 000.) The setting range for the HMI EM bank number is 0 to 12.
- The refresh period for the HMI data is specified by ITEM051 of the System Common Block (block model 000.) ITEM051 is known as the "HMI function's operation cycle".

2-2 Setting up the Hardwares.

This chapter describes the procedure to set up the hardwares designed in "Step1. Design".

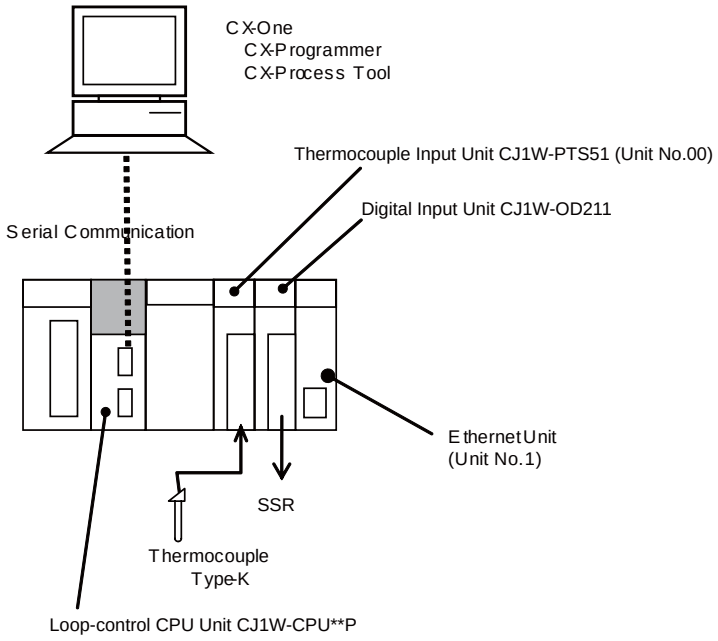

1. Installing and wiring the Loop Control Board and Analog I/O Unit.

The Loop Controller is built in the Loop-control CPU Unit (CJ1G-CPU**P); therefore, it is not necessary to install and wire the Loop Controller.

2. Wiring Analog I/O Unit and Communication Unit

Example

Unit	Type	Wiring
Thermocouple Input Unit	CJ1W-PTS51	Input 1 (Wire the thermocouple to B4+ and A4-)
Digital Output Unit	CJ1W-OD211	Output 1 (B8: Common)
Ethernet Unit	CJ1W-ETN21	Twisted-pair cable

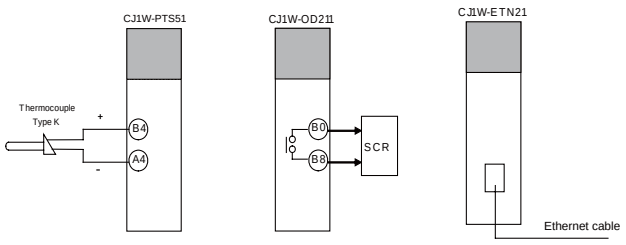

3. Setting the Unit Number and Node Address

(1)Set the No. below for each unit.

♦Special I/O Unit (Ex. Analog I/O Unit): Unit number 0 to 95

Unit Number Switches

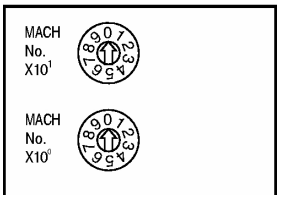

NOTE: If two or more Special I/O Units are assigned the same unit number, a "UNIT No. DPL ERR" error (in the Programming Console) will occur and PLC will not continue operation. "ERR/ ALM" LED on the CPU Unit will be lit.

♦CPU Bus Unit (Example: Ethernet unit):Unit number 0 to F(digit hexadecimal: 0-15), Node No. 01 to FE (1 to 254 decimal)

Unit No,	Node No,
	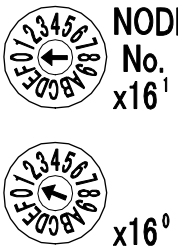

Note: Do not set a Unit number that has already been set for another CPU Bus Unit. If a Unit No. is duplicated, "ERC" indicator on the CPU Bus Unit will be lit.

Example

Unit Name	Model	Unit Type	Rotary switch
Thermocouple Input Unit	CJ1W-PTS51	Special I/O Unit	Unit No.: 0
Ethernet Unit	CJ1W-ETN21	CPU Bus Unit	Unit No.: 1
			Node No.: 1

2-3 Initial Setting of PLC on CX-Programmer.

This chapter describes the procedure of initial setting of PLC with CX-Programmer.

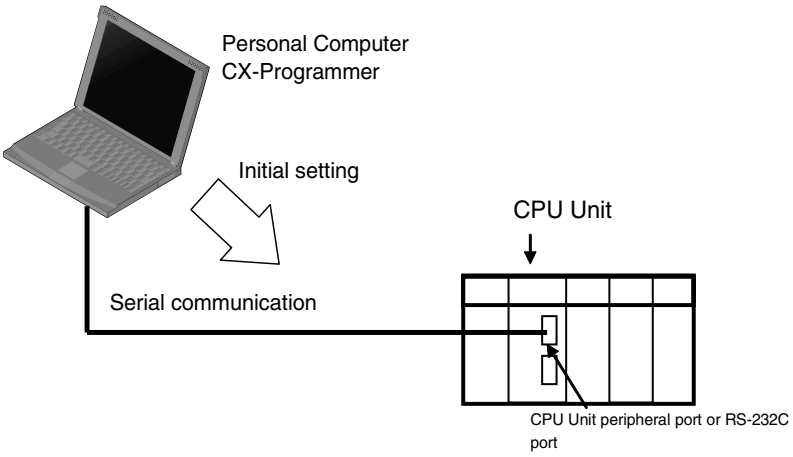

NOTE:

In case that the PLC model or communication method is unknown, Auto Online enables automatic connection with connected PLC, recognizing the PLC model and communication method. When Auto Online is executed, it is possible to upload and monitor the program after connecting CX-Programmer and PLC. (In case that CX-Programmer is connected to PLC by Auto Online, it is not necessary to execute ***2) Starting a New Project on CX-Programmer***, ***3) Setting the Device Type***, and ***4) Setting the Network Type***.

Procedure: Select ***PLC*** - ***Auto Online*** - ***Auto Online***. A "New Project" will be automatically created. The Program, PLC Settings, and I/O Table are uploaded from the PLC. Auto Online can be utilized when Communication Settings of PLC is set to any of 9600(default), 19200, 38400, or 115200 bit/s and communicaton mode is set to either of Tool Bus or Host Link.

1. Starting CX-Programmer

Start the CX-Prorammer following the procedure described below.
Program - ***Omron*** - ***CX-One*** - ***CX-Programmer*** - ***CX-Programmer***.
CX-Programmer can be started from the CX-Integrator, too.

2. Starting a New Project on CX-Programmer

Use the following procedure to create a new project.
Select ***File*** - ***New***.

3. Setting the Device Type

(1)***Change PLC*** dialogue box will be displayed on the display

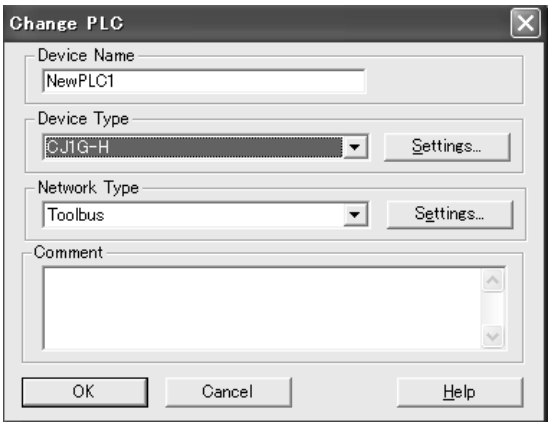

(2)Select ***Device Type*** in the pull-down list to specify the PLC type.

PLC series		Device type to be set.
Loop-Control CPU Unit	CJ1G-CPU42P	CJ1G-CPU42H
	CJ1G-CPU43P	CJ1G-CPU43H
	CJ1G-CPU44P	CJ1G-CPU44H
	CJ1G-CPU45P	CJ1G-CPU45H

(3)Click the ***Settings*** button.
(4)Set the CPU Type (CPU** in the table above) and click the ***OK*** button.

4. Selecting the Network Type

Set the network type to communicate with PLC.

(1)For serial comunciation, select ***Toolbus***. Connect the personal computer to the CPU Peripheal port.
(2)Click the ***OK*** button.
Note: The network settings must be identical to the settings in the CPU Unit.(DIP sw and PLC Settings).

5. Connecting the Personal Computer and CPU Unit with Serial Cable.

Connect CX-Programmer to the CPU Unit with a serial cable. (CPU Peripheral port or RS232C port)

Connection	Figure	Network type
Direct serial con-netcion	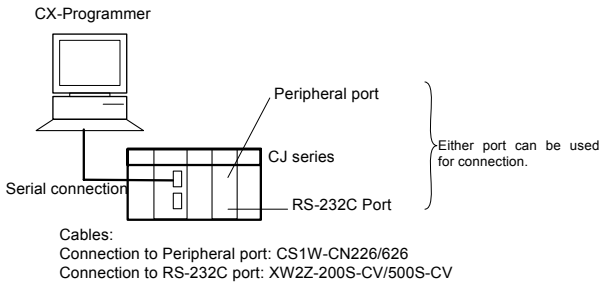	Peripheral Bus (Toolbus): Select ***Toolbus*** or Host Link : Select ***SYSMAC WAY***

Refer to ***Appendix3-2 Connections via Ethernet*** to directly connect the CX-Programmer to PLCs. via Ethernet

6. Setting the DIP Switch of the CPU Unit

Set the initial hardware configuration for the CPU Unit.
Set the parameters for Serial port (Peripheral or RS232C port) communication and automatic program transfer enabled/disabled when power is turned ON.

Example: When PLC Settings is in default setting.

- When connecting to Peripheral port through Toolbus: SW4=OFF
- When connecting to RS232C port through "SYSMAC WAY": SW5=OFF

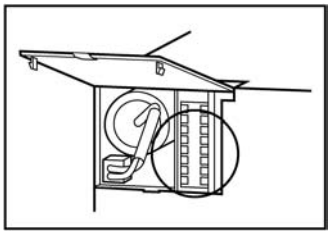

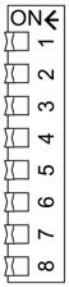

SW4: ON : Use peropheral port parameters set in the PLC Setup.
OFF: Auto-detect CX-Programming console or CX-Programmer parameters at the periferal port.
SW5: ON: Auto-detect CX-Programmer parameters at the RS232C port.
OFF: Use RS-232C port parameters set in the PLC Setup.

7. Turning ON the PLC Power

Turn ON the PLC Power.

8. Going Online with the PLC and Creating I/O Tables

Allocate I/O Memory based on the actual I/O (Basic I/O Unit) and CPU Bus Unit.

NOTE:

Registered I/O table

The information of mounted unit type and locations of all Units is called "Resistered I/O tables". CPU Unit recognizes the mounted Units according to this information.

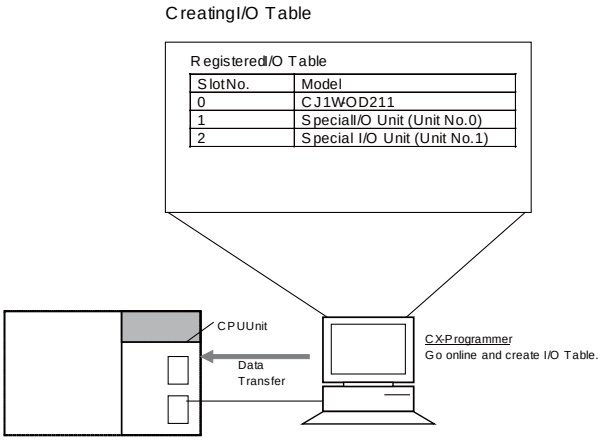

I/O tables can be created by the following two procedures:

a) Create I/O table: Creating I/O tables based on mounted Units

b) Configure I/O table: I/O tables creation offline without mounted Units on the Pesonal Computer. The I/O tables are transferred to the CPU Unit.

NOTE:

I/O Memory address of DIO (contact I/O) and AIO (analog I/O)

- I/O Memory address of DIO (contact I/O) is automatically determined by I/O table creation according to the mounted location of the Basic I/O Unit.
- I/O Memory address of AIO (analog I/O) is determined with the rotary switchs (Unit No.) on the front panel of the Analog I/O Unit.

◆"I/O table creation" Procedure

Create an I/O Table online following the steps below.

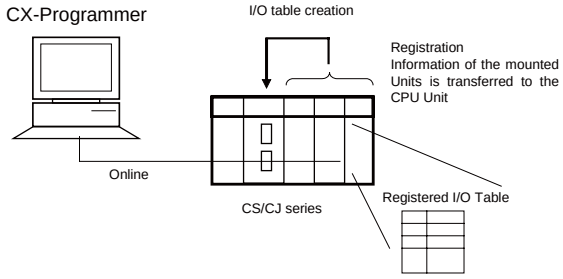

(1)Select ***PLC*** - ***Work Online***. (Or, right-click on the ***PLC*** in the project tree and select ***Work Online***).

NOTE:When going online with the CPU Unit and connection can not be made with the message of "Failed to connect the PLC because the PLC type does not match.", right-click on the ***PLC*** in the project tree on the left window and select ***Change*** to change the Device Type or CPU Type.

(2)Select ***PLC*** - ***Operating Mode*** - ***Program*** (or, double-click on the ***PLC*** in the project tree and select ***Operating Mode*** - ***Program***).

(3)Select ***PLC*** - ***PLC Information*** - ***I/O Table*** (or, double click ***I/O Table*** on the project tree).

(4)Select ***Option*** - ***Create***.

◆Memory Allocation of each Unit on the CS/CJ series CPU Unit

Memory allocation of each Unit on the CS/CJ series CPU Unit differs depending on the Unit type. The table below shows the allocation of each Uint type.

Unit Type	Example	Allocated Area	
		CIO Area	DM Area
1) Basic I/O Unit	Contact I/O Unit	I/O Area (0000 to 0319CH) Memory is allocated based on mounting position in the Racks.	-
2) Special I/O Unit	Analog I/O Unit	Special I/O Unit Area (2000 to 2959CH) Each Unit is allocated ten words based on its unit number (0 to 95) setting.	DM Area for Special I/O Units (D20000 to 29599) is allocated 100 words for each Special I/O Unit based on unit number (0 to 95).
3) CPU Bus Unit	Communication Unit including Ethernet Unit	CPU Bus Unit Area (1500 to 1899CH) Each unit is allocated 25 words based on its unit number setting (0 to F).	DM Area for CPU Bus Units (D30000 to 31599) is allocated based on unit number (0 to F).

◆Basic I/O Unit (Contact I/O Unit)

When I/O tables are created with CX-Programmer, I/O words are automatically allocated for the Basic I/O Units based on the position that Units are mounted (from left to right order) in I/O Area (0000 to 0319CH).

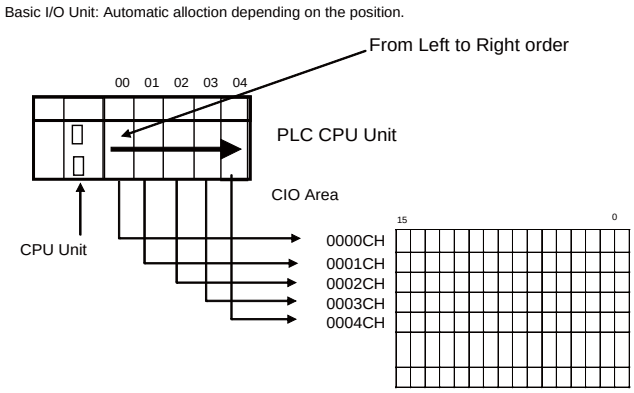

NOTE:CH means Word data (16 bit).

◆Special I/O Unit, including Analog I/O Unit

Each Unit is allocated ten words in the Special Unit I/O Area (2000 to 2959CH) based on its unit number (0 to 95) setting.

Each Special I/O Unit is allocated 100 words in DM Area for Special I/O Units (D20000 to 29599) based on the unit number (0 to 95).

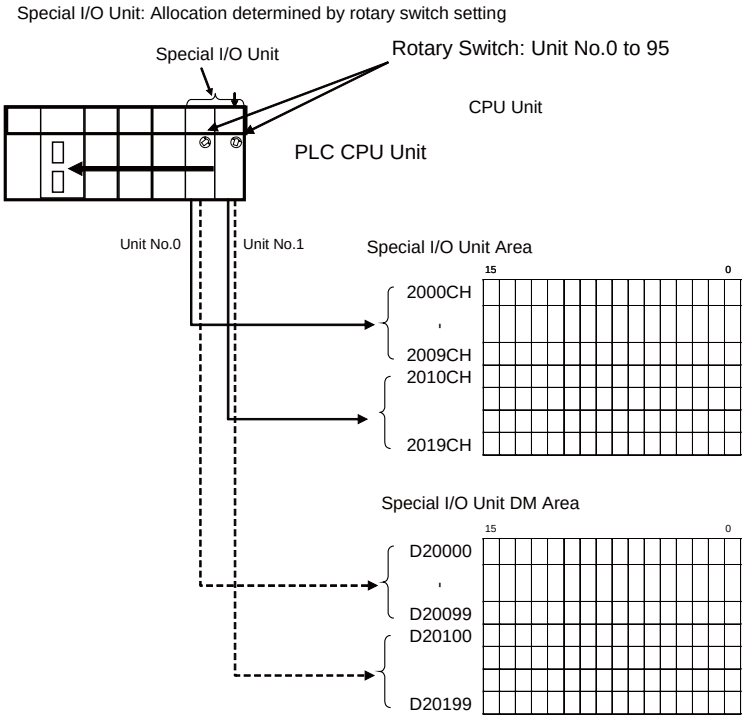

Example: Analog I/O Unit

- Operation data such as Analog Input/Output values are allocated in Special I/O Unit Area (2000 to 2959CH).

- Initial setting values such as sensor/input type and settings for rate of change are allocated in DM area for Special I/O Units (D20000 to 29599). (This area is used to set the user-defined settings).

◆CPU Bus Unit, including Communication Unit

Each unit is allocated 25 words in the CPU Bus Unit Area (1500 to 1899CH) based on its unit number setting (0 to F) set by roraty switch. Each Unit is allocated 100 words in the DM Area for CPU Bus Units (D30000 to 31599) based on its unit number (0 to F).

NOTE:

Access Method of LCB to DI/O and AI/O

LCB inputs/outputs contact signal or analog signal from/to an external device, by exchanging data with contact or analog I/O Units.

Data exchange requires the operation below on the CX-Process Tool.

(1)Field Terminal block which corresponds to the Input/Output Unit must be registered on the Block Diagram.

(2)To corelate the Field Terminal block with the Unit, it is necessary to set the following:

- For Contact I/O block, enter leading word No, allocated to the Unit to the ITEM007 (CIO word No.).*1
- For Analog I/O block, enter the Unit No, (0 to 95) which is set by the rotary switchs on the front panel of the unit to the ITEM007 (Unit No.).*2

*1: I/O Memory address of DI/O (Contact I/O) in the CPU Unit is automatically determined based on the mounted Basic I/O Unit location when I/O table is created.

*2: I/O Memory address of AI/O (Analog input) in the CPU Unit is determined based on the rotary switchs on the front panel of the Analog I/O Unit.

WARNING

For ITEM007 (CIO Word No.) of the DI/O Field Terminal block, enter the leading word No. allocated to the Unit to access. If wrong address is entered, different contact will be input/output.For ITEM007 (Unit No.) of the Analog I/O Field Terminal block, enter the Unit No, of Analog I/O Unit to access. If wrong Unit No. is entered, relay area allocated for other Special I/O Unit will be input/output.

9. Setting Analog/ Process I/O Units

◆Settings for Process I/O Unit

Onece I/O Table is created by CX-Programmer, function settings (settings in the DM Area for Special I/O Units) of Process I/O Units can be easily edited in the parameter list on the CX-Programmer. The parameter list will be displayed by double clicking the Process I/O Unit from the I/O Table.

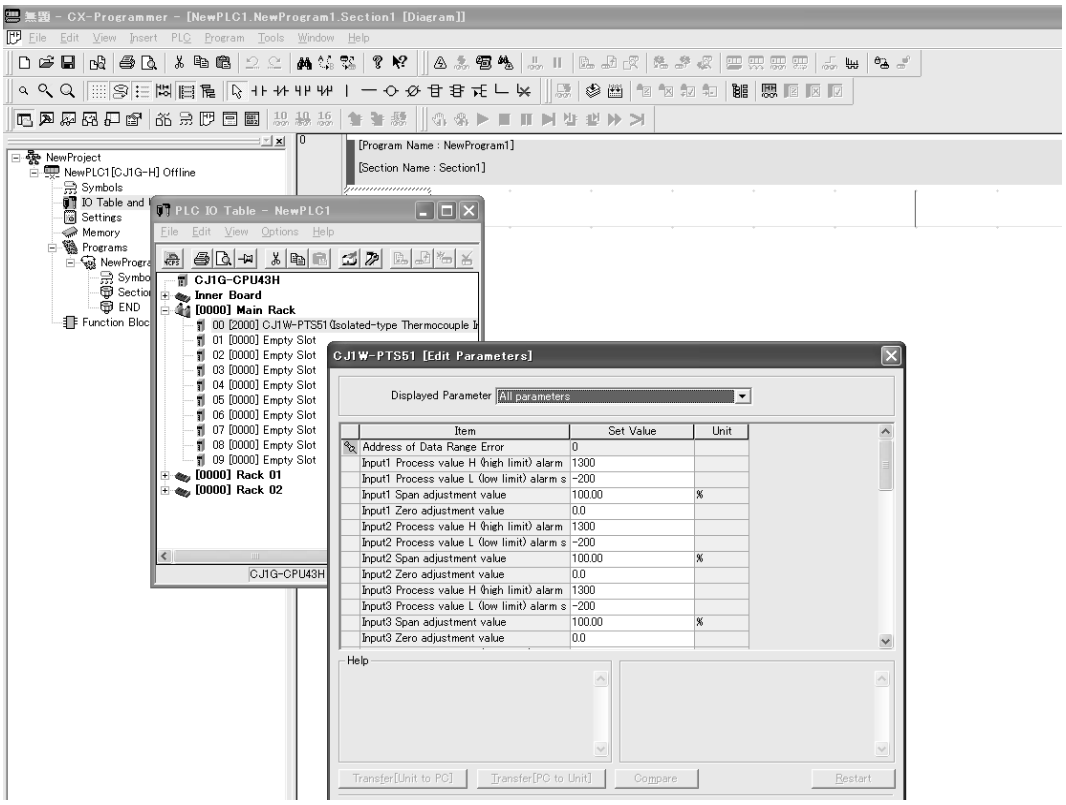

◆Settings for Thermocouple Input Unit CJ1W-PTS51 (Setting for Input Sensor type=K)

Double-click on the Unit (CJ1W-PTS51) in the I/O Table window of the PLC. ***Edit Parameters*** window will be displayed. From the ***Displayed parameter***, select ***Common (Initial settings area)*** and set ***K (with decimal point)*** for the ***Input Sensor type***.

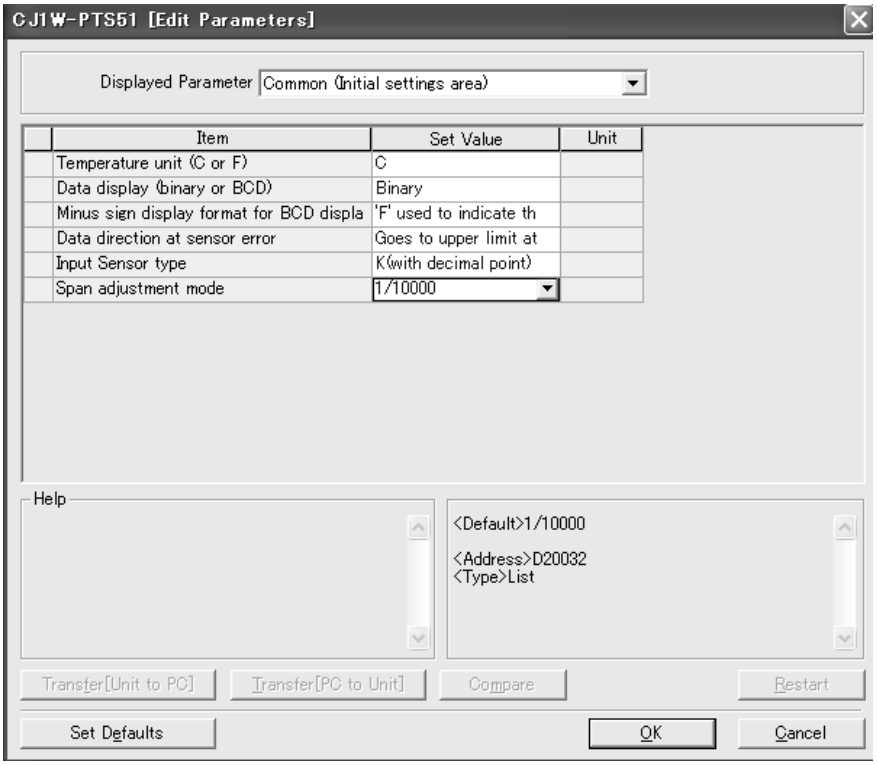

NOTE: When thermocouple type K (0.0 to 500.0 °C) is utilized and its data is handled in parcentage unit (0 to 100%), it is necessary to write 1Hex (K with decimal point) in D20019 (Unit No,=0 in this example: D20000+19) which is determined by the following expression: DM Area m+19CH (m=D20000+ Unit No.x100). However, same setting can be entered from the I/O Table. It is easier to enter the parameter setting from the I/O Table on the CX-Programmer, compared with manual setting.

10. Transferring the DM Area for Special I/O Unit to the CPU Unit

Transfer DM Area for Special I/O Unit to the CPU Unit.

(1)Select ***PLC*** - ***Work Online*** on the CX-Programmer.

(2)On the PLC Memory window, select ***PLC*** - ***Transfer*** - ***to PLC***.

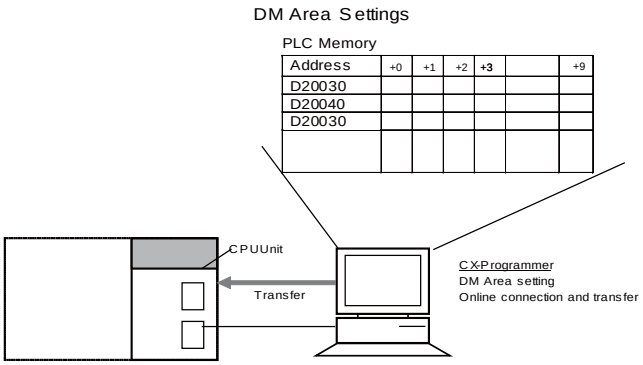

2-4 Programming Offline for Loop Controller.

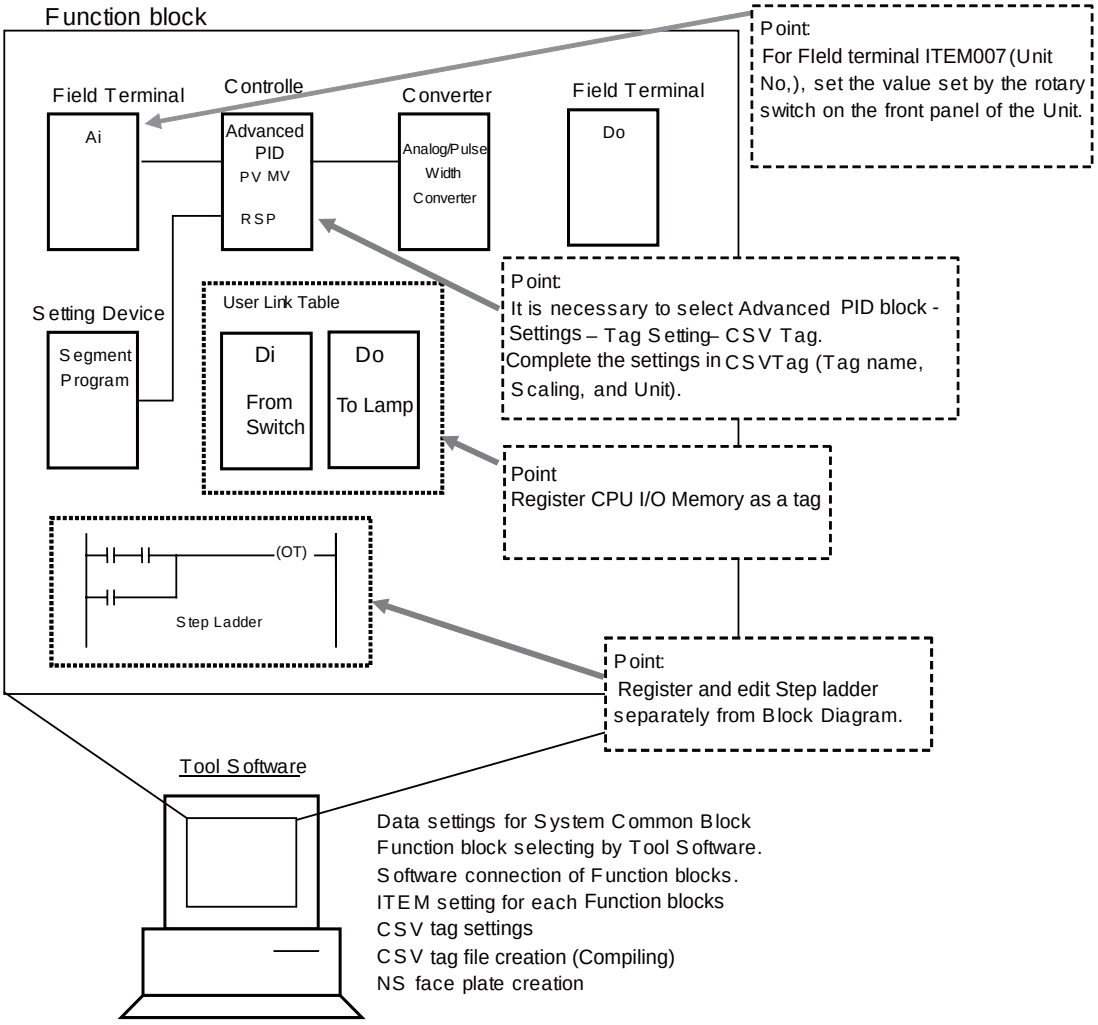

1. Starting CX-Process Tool

Start the CX-Process Tool from the ***Start*** button in the Microsoft Windows taskbar. Select ***Omron*** - ***CX-One*** - ***CX-Process Tool*** - ***CX-Process Tool***.

NOTE: CX-Process Tool can be started with settings inherited from the CX-Programmer.

2. Starting a New Project

Next, start a new project by selecting ***File*** - ***New.***
A folder to save the project file must be selected.

The window below will be displayed.

Specify a file name in the ***New Project Name*** field.
A new folder with the project name (Ex. PLC-based Process Control CJ) entered in this dialogue box will be created in the folder which was selected in 2). In the folder, a new prroject file (extension: mul) with the same project name will be automamtically created (Ex. PLC-based Process ControlCJ.mul).

3. Creating (Inserting) a New Function Block File for the Node

(1) Select ***Settings*** - ***Insert*** - ***Insert Node***.
(2)***Insert LCB/LCU*** dialogue box below will be displayed.

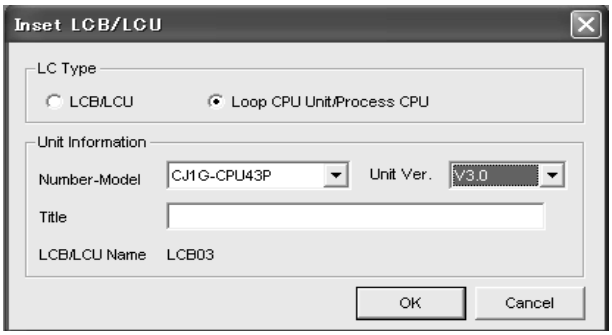

Select Loop-control CPU Unit/Process CPU in the LC Type.
Set ***CJ1G-CPU43P*** from the pull-down list of ***Number-Model*** and click the ***OK*** button.
To change the Unit version, select the version from the ***Unit Ver.*** pull-down list.

information

When V3.00 or later version is set for the LCB Unit Ver., the version can not be changed to Ver.2.00 or ealier version by executing Change LC Type. Check the LCB Unit Ver. before inserting the LCB.

(3)Function Block File for the Node will be displayed in the Project Workspace Tree.

(4)Below is an example for Node00 [CJ1G-H CPU43].

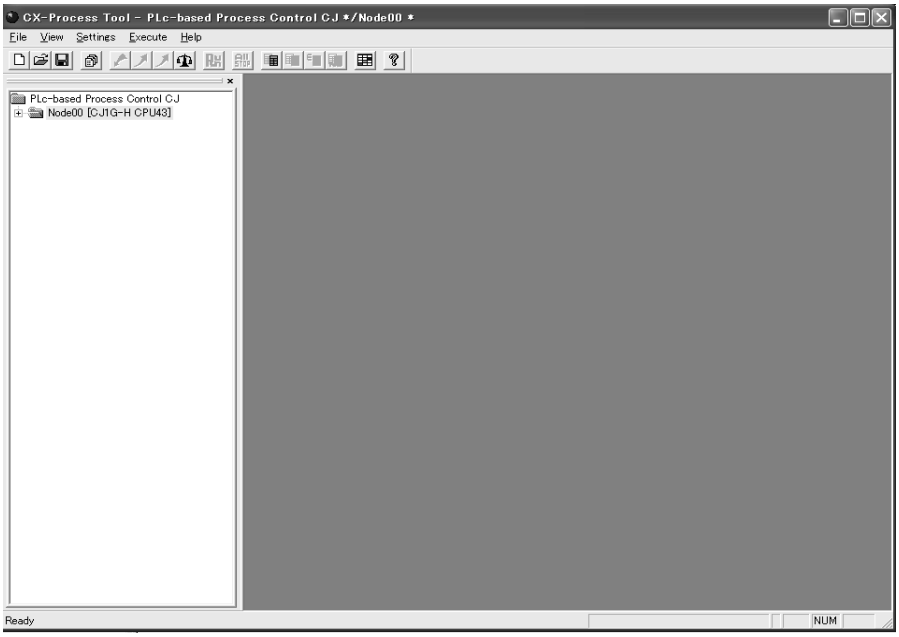

4. Software Initial Setting for the Loop Controller

Set the initial settings common to each function block in the System Common block (Block Model 000).

(1)Double-click on the ***System Common*** located under the System folder ***00-LCB03*** in the Project

Workspace Tree.

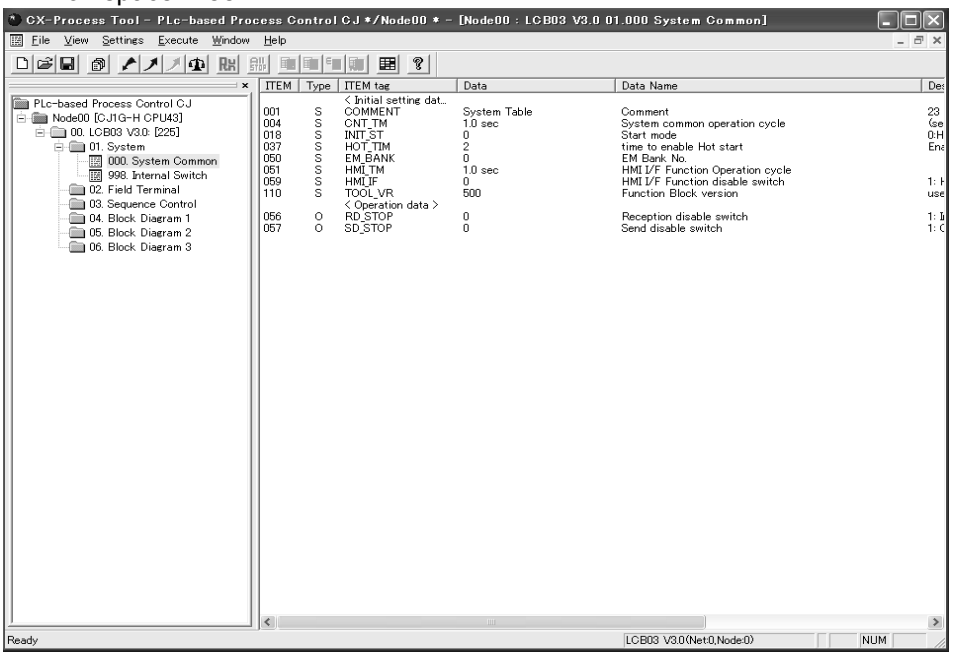

(2)Double-click on each ITEM and enter the value in the table below.

Data settings for System Common block

ITEM	Data Name	Setting	Discription	Options	Discription
004	System common operation cycle (s)	1	0.1s	1: 0.1sec, 2: 0.2 sec, 3: 0.5 sec, 4: 1 sec, 5: 2 sec	Total program in the Loop Controller is cyclically pefomed every operation cycle. Specifies operation cycle.
018	Start mode at power ON.	2	COLD start	0: Hot start within specified time 1: HOT start 2: COLD start	There are three ways that the Loop Controller can start operation: ·Hot start within specified time: A hot start performed after recovering from a power interruption within the specified time. ·COLD Start Operation is started after all values in the program is initialized, ·HOT Start Operation is started with values that existed before the power was turned OFF.
050	EM Bank No.	0	EM Bank No.0 (Note)	EM Bank No.: 0 to 1	Specifies allocated area for HMI interface and update cycle of HMI data area.
051	Operation cycle for HMI function	1	0.1 s	1: 0.1 sec, 2: 0.2 sec, 3: 0.5 sec, 4: 1 sec, 5: 2 sec	

NOTE: EM bank No. for CJ1G-CPU45P is selectable from No. 0 to 2.

NOTE:

HMI Function

HMI Function always allocates ITEM data of the Function blocks in a specified EM bank in the CPU Unit.

HMI Software and PT read/write ITEMs in the Contol/Operation Block, External Control Block, and System Common Block thtough this allocated HMI data area.

Refer to ***Appendix3-1 HMI Function.***

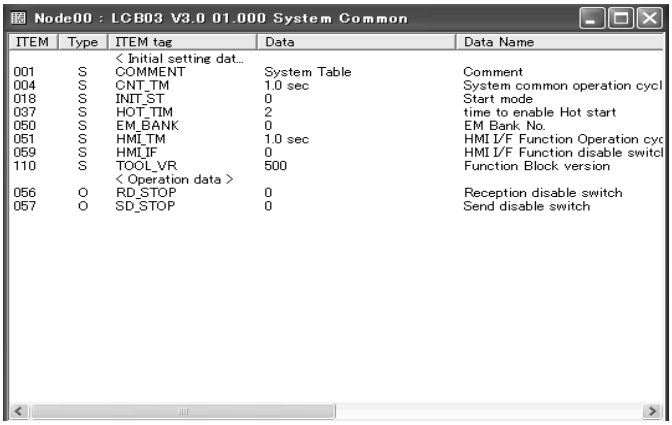

5. Registaring Function Blocks

Register necessary Function blocks.

Once a Function block is registered, it will be displayed on the Project Workspace.

(1)Select a Block Diagram to be pasted in the Project Workspace and double-click on it.

(2)Click the right mouse button at the pasting position in the ***Block Diagram*** window and click on the ***Register*** to select Function block type from the pop-up menu. In CX-Process Tool V3.0 or later version, Function blocks can be freely pasted on the desired position.

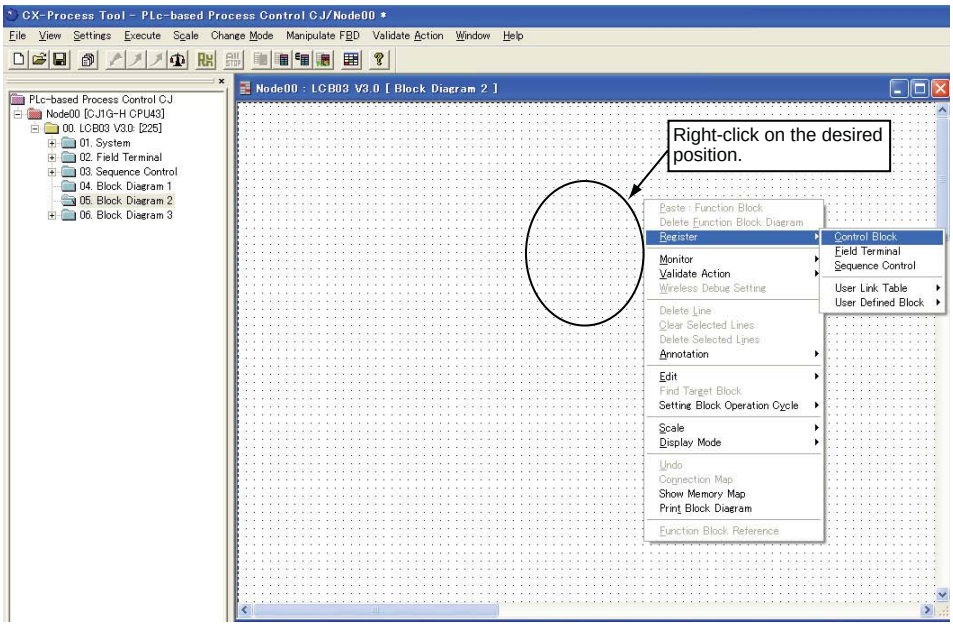

Register the Function Blocks using the following procedure:

(3)Select ***Resister*** - ***Control Block***. In the ***Insert FunctionBlock for Blick Diagram*** dialogue box, select ***Control Block*** for Function Block Type and ***012: Advanced PID*** for Block Name.

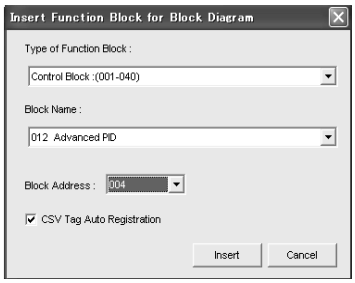

(4)Select ***Resister*** - ***Control Block***. In the ***Insert Function Block for Blick Diagram*** dialogue box, select ***Others, Contact Type Operation Teminal*** for Function Block Type and then specify ***192: Analog/Pulse Width Converter*** for Block Name.

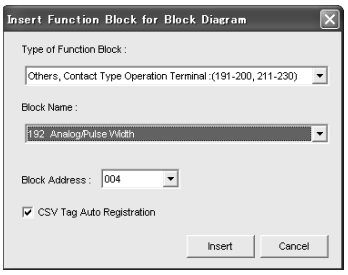

(5)Select ***Resister*** - ***Control Block***. In the ***Insert FunctionBlock for Blick Diagram*** dialogue box, select ***Time Function*** for Function Block Type and specify ***157: Ramp Progarm*** for Block Name.

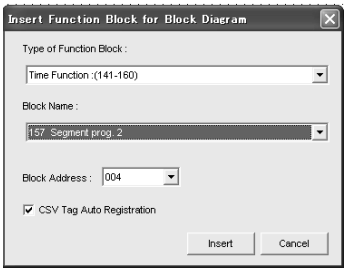

(6)Select ***Resister*** - ***Field Terminal***. In the ***Insert field terminal*** dialogue box, select ***566 Ai 4-point (PTS51)***, ***514 Do 16-point Terminal, 501 Di 8-point Termnal,*** and ***512 Do 8-point Terminal*** for Block Name

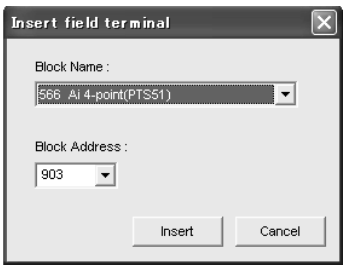

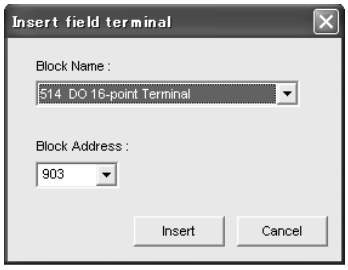

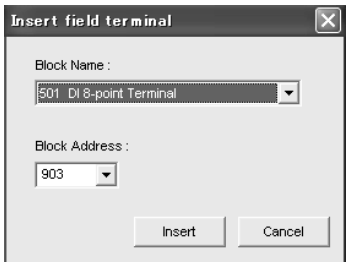

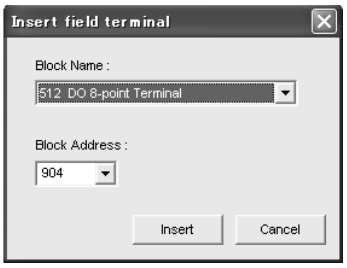

(7)Click the ***Insert*** button. Block Address will be incremented by one.

NOTE:

Order of Execution in Block Diagram and Block Address

Block address of the Control block is automatically assigned in the order of registration, if it is not specified.

The order of execution is in the order of Input-type Field Terminal block, Control/ Operation block (in the order of block address), and Output-type Field Terminal block. Therefore, in the default setting, order of registration is equal to the order of execution.

(To specify the execution order set the ITEM005: Execution order) in each block.

6. Making Software Connection between Function Blocks

Make software connection between the analog signal and integrated values of the registered Function blocks.

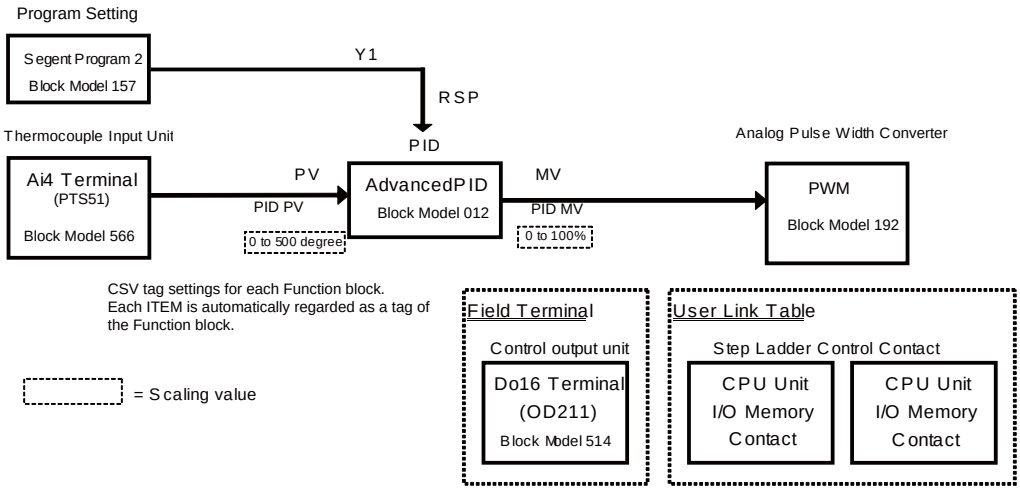

(1)Click on the ITEM for a starting point of the connection and the double-click an ITEM for the end point. Software connection will be made. To connect function blocks by going around other blocks, bent connection lines at right angles by clicking at the corner to bend.

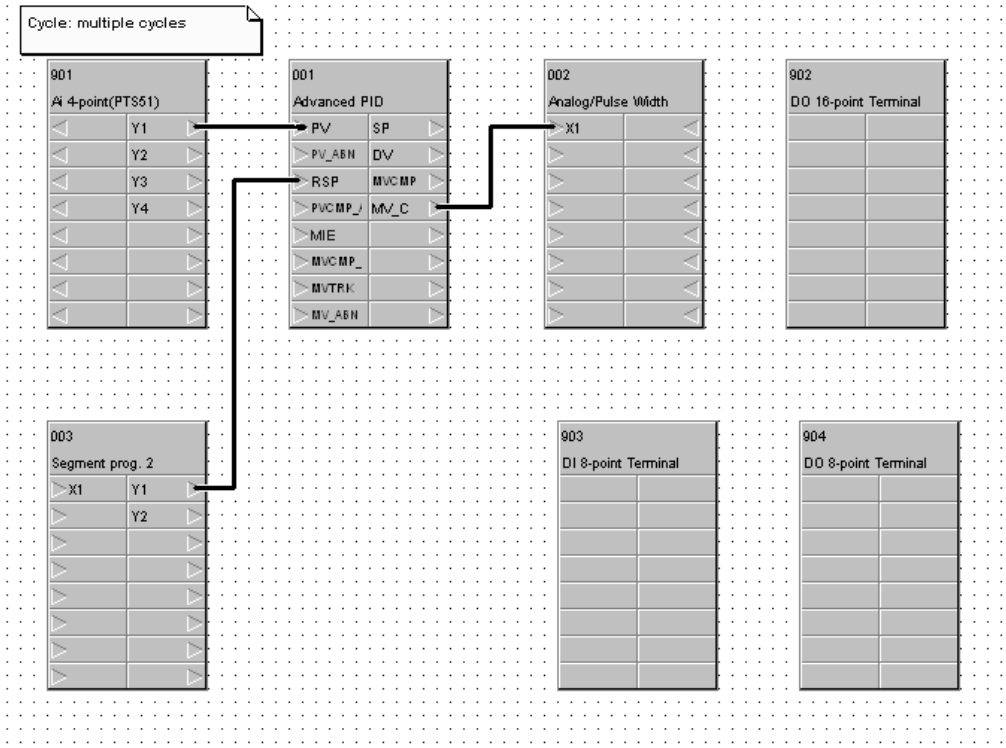

NOTE:

- Delete the line connected to the block first, and then delete the block. If the block is deleted first, registation of the deleted block will be left in the block of starting point. In such case, the ITEM data of starting point must be set to 0. Otherwise, the line cannot be changed.
- To delete a line, select the line to be deleted, click the right mouse button (the line will be displayed in red), and select ***Delete Line*** from the pop-up menu.
- The ITEM name will be displayed if you point at the ITEM at the end point. Confirm ITEM names when making connections.
- To change the position of a function block or line, select the block or line and drag it to the desired position.

(2)It is possible to insert annotations onto the block diagrams. Click the right mouse button and select ***Annotations*** - ***Insert***. To change the size of the font in the annotation, select the annotation, click the right mouse button to display the pop-up menu and select ***Annotations*** - ***Selected Annotation*** - ***Font Size***. (The default font size is 12 points.)

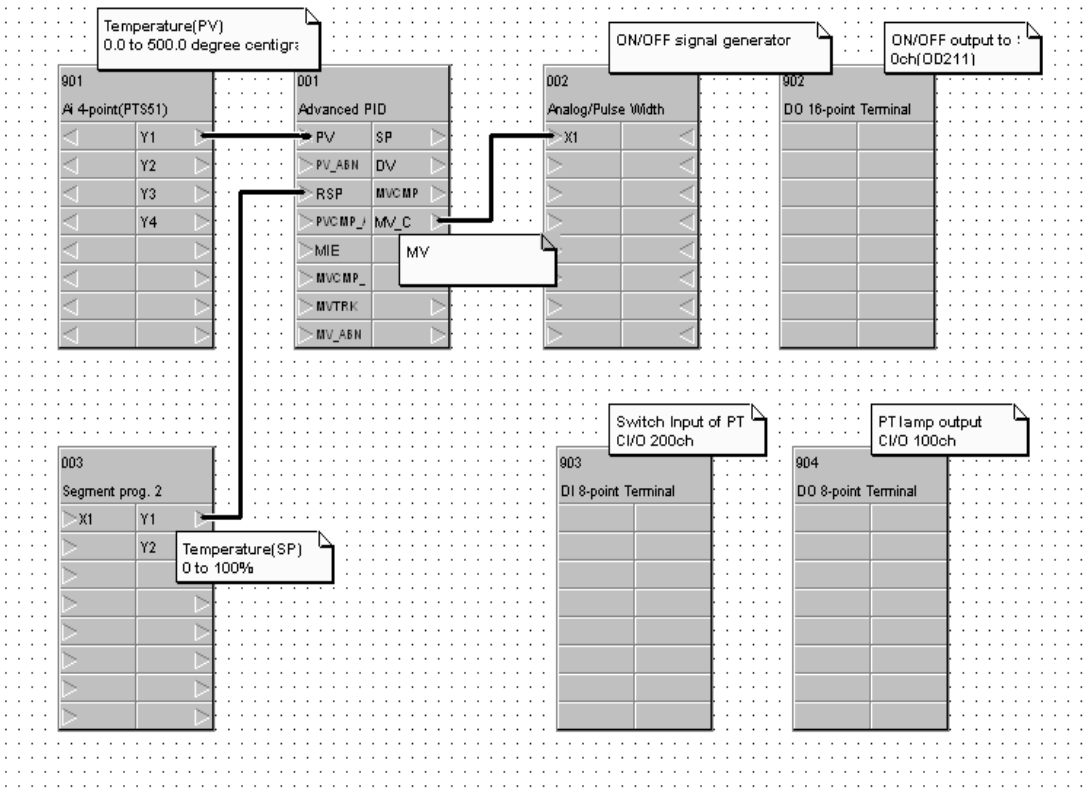

(3)Store the data, including the settings written in the following pages by selecting ***File*** - ***Save.***

7. Setting ITEMs in Function Blocks

◆Setting Unit No. of Analog I/O Field Terminal Block

Set the Unit No. of Analog I/O Units which is set by the rotary switchs on the front panel to the ITEM007 (Unit No.) of analog I/O field terminal block (Ai 4-point, Ao 4-point).

Analog I/O Unit

	Thermocouple Input	Contact Output
Model	CJ1W-PTS51	CJ1W-OD211
Rotaty switch setting	0	-

Field Terminal

Block model	566	514
Function block name	Ai 4-point	Do16-point
ITEM007 (Unit No./CIO CH)	Unit No. 0	0CH

Setting Example: Unit No. (ITEM007) of Ai 4-point terminal (Block model 561) =00

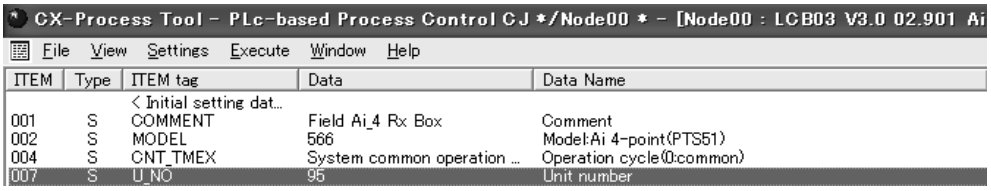

Set the Unit No. of Analog I/O Unit in ***Data*** for Field Terminal blocks.

WARNING

For the ITEM007 (Unit No.) of Analog I/O field terminal, set the correct Unit No. of Analog I/O Unit which is specified by rotary switchs on the front panel. If the wrong Unit No. is set to the ITEM, data of other Special I/O Unit will be input/output (read/written).

◆Settings for ITEMs for Advanced PID block (Block Model012)

Example:

ITEM	Data Description	Setting	Description	Options
024	Set Point setting mode	1	Remote/Local	0: Local only 1: Remote/Local

8. Creating Step Ladder

(1)Before starting step ladder creation, register CPU memory area to be used in the User Link Table.

Select ***Settings*** - ***Edit*** - ***User Link Table***.

The dialogue box shown below is displayed.

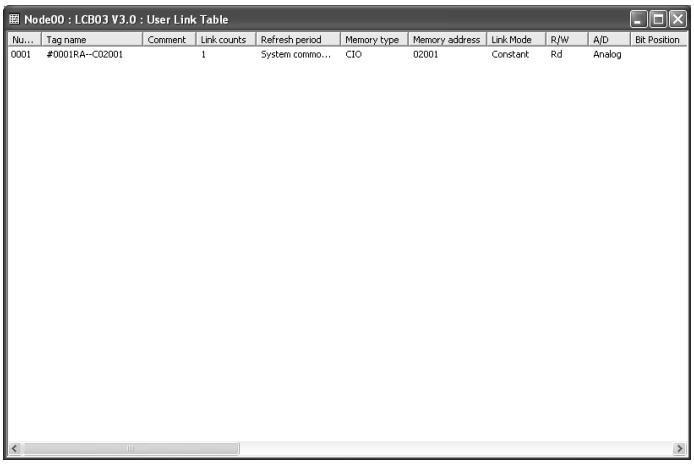

Right-click on the User Link Table Edit Screen and select ***Add*** from the pop-up menu.

The following dialogue box will be displayed.

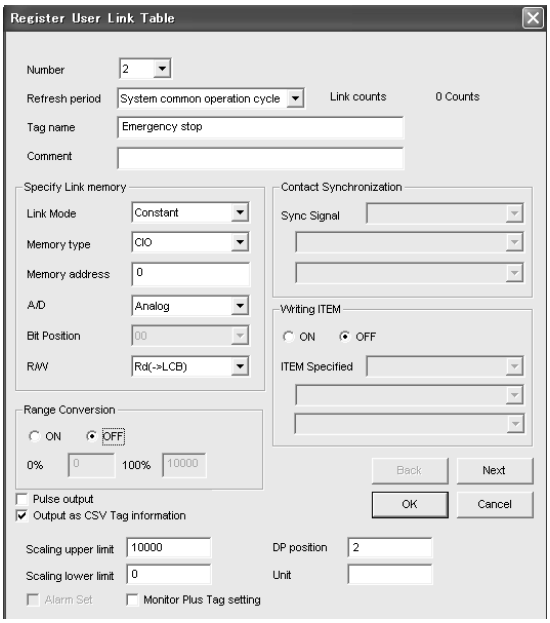

Direction to write data	Setting items		Description
CPU Unit to Loop Controller	Tag name		Emergency Stop
	Comment		Emergency Stop Button
	Refresh cycle		System common operation cycle
	Link Memory settings	Link Mode	Always
		Memory type (Area type in the CPU Unit I/O memory area)	CIO
		Memory Address	200
		A/D	Contact
		Bit position	0
		R/W	Rd(to LCB)
Loop Controller to CPU Unit	Tag name		Lamp
	Comment		Warning Lamp
	Refresh cycle		System common operation cycle
	Link memory settings	Link Mode	Always
		Memory type (Area type in the CPU Unit I/O memory area)	CIO
		Memory Address	100
		A/D	Contact
		Bit position	0
		R/W	Wr(From LCB to)
	Tag name		SSR
	Comment		For Heater Output
	Refresh cycle		System common operation cycle
	Link memory settings	Link Mode	Always
		Memory type (Area type in the CPU Unit I/O memory area)	CIO
		Memory Address	0
		A/D	Contact
		Bit position	1
		R/W	Wr(From LCB to)

Note: Tag name must be registered.

information

User Link Table

User Link Table is used to exchange data between use-defined I/O Memory area and Function blocks in the Loop Controller.

For data exchange between Loop controller and I/O Units, utilize Field Terminal. For data exchange with the I/O Memory in the CPU Unit, HMI Function is used. In these functions, I/O Memory address in the CPU Unit is automatically allocated.

User Link Table is useful to read/ write the data in the Loop Controller to/from the user-defined I/O Memory area in the CPU Unit,

For example, to read the Remote Set Point (RSP) from the DM area of I/O Memory in the CPU Unit, allocate the DM area in the User Link Table and connect the User Link Table with RSP of PID block. In the following screen, DM100 is allocated to the User Link Table and it is connected to the RSP of Basic PID block.

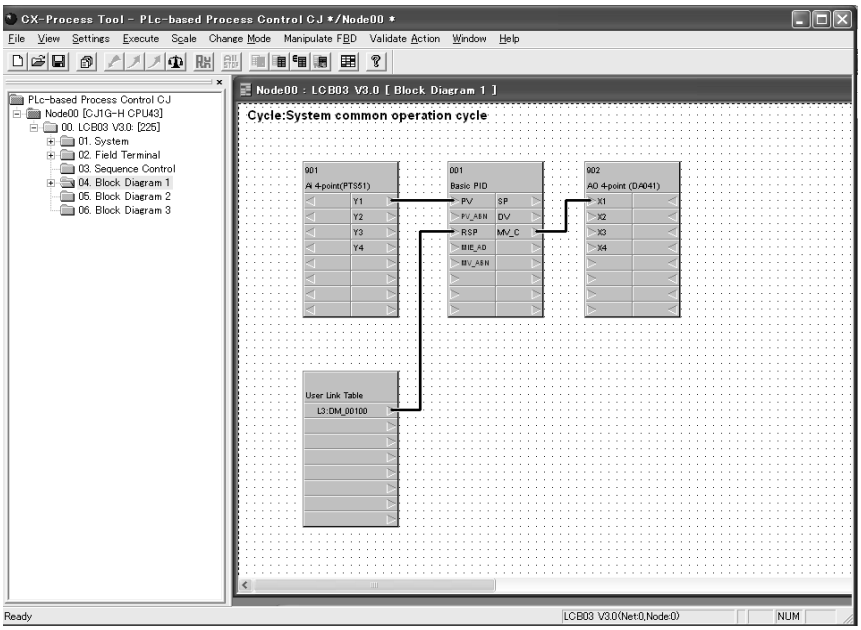

(2)Select the ***Sequence Control*** folder and right-click on it. Select ***Insert***.

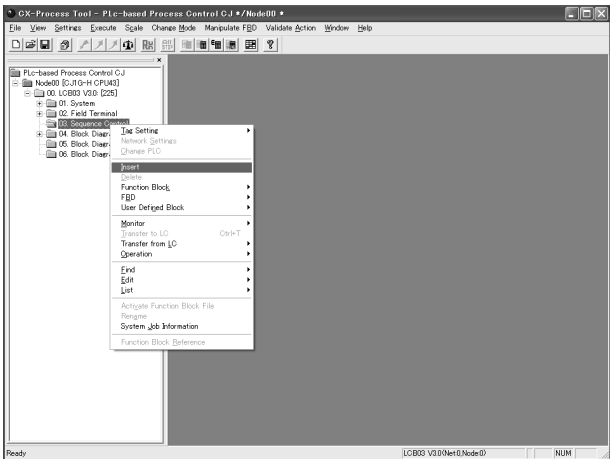

(3)Select ***301: Step Ladder Program*** in the ***Insert Sequence Control Block*** dialogue box.

(4)Double-click on the ***Step Ladder*** which is located under the ***Sequence Control*** folder. Step Ladder will be displayed

(5)Select and use icons from the menu to create a ladder diagram.

Condition

Operation

Connection

Operation

◆Sequence Logic 1

Conditions

Conditions	Values to be used to judge conditions
HighHhigh alarm (HH) output of the Loop is ON.	ITEM013 (High/High alarm (HH) output) of the PID block is ON.
Auto/Manual SW: Auto	ITEM086 (Auto/Manual SW) is ON.

Manipulations

Description of the manipulation	Values to be manipulated.
MV is set to 0%	ITEM080 (Preset MV switch) of the PID block is turned ON. Set the ITEM081 (Preset MV value) to "0", before.
Warning lamp is turned ON.	0100CH 00bit (contact signal allocated in the PLC Memory) is turned ON.

◆Sequence Logic 2

Conditions

Conditions	Values to be used to judge conditions
Emergency Stop Button is ON.	200CH 00 bit (contact signal allocated in the PLC Memory) is ON00

Manipulation

Description of the manipulation	Values to be manipulated.
MV is set to 0%	ITEM080 (Preset MV switch) of the PID block is turned ON. Set the ITEM081 (Preset MV value) to "0", before.
Warning lamp is turned ON.	0100CH 00bit (contact signal allocated in the PLC Memory) is turned ON.

The program which is completed is shown below.

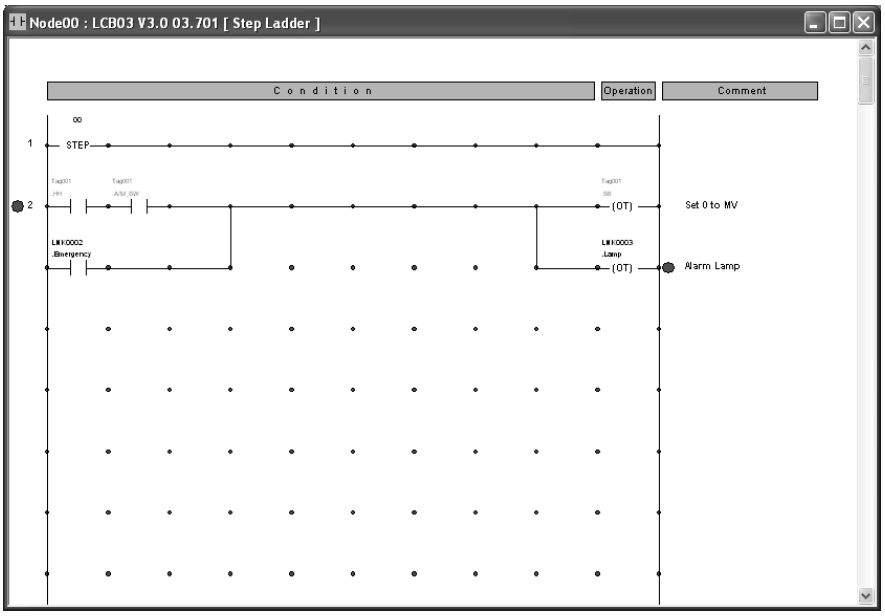

information

Registering User Link Table

As described before, User Link Table can be registered by pasting User Link Table function block on the Block Diagram. Other than that, use one of the following methods to create a user link table.

- Registration on the User Link Table Edit Screen
- Batch registration on the User Link Table Edit Screen
- Automatic Registration when Pasting Field Terminal Block and Creating Software Connections

9. CSV Tag Setting

Analog data in the Loop Controller is handled in percentage unit. Therefore, scaling data for the Loop Controller must be set in each Function block so that tags can be utilized for HMI software or PT.

Tag names (tag name for each Function block), which is utilized for HMI software or PT to access to Function block data must be set for this CSV tags, too.

(1)In the Project Workspace, select a Function block (control block or operation block) to which CSV tag can be set.

(2)Click the right button of the mouse and select ***Tag Setting*** - ***CSV Tag***. Or, Select ***Settings*** - ***Tag Setting*** - ***CSV Tag***. The CSV Tag Configuration dialogue box shown below will be displayed. Settings for Scaling range: 0.0 to 400.0 °C.

Example:

Tag name: PID, Scaling Upper Limit: 4000, Scaling Lower Limit: 0, DP: 1, Unit:°C

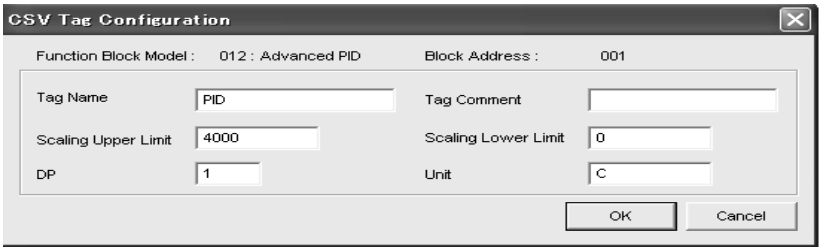

(3)Enter Tag name, Scaling Upper/Lower Limit, DP (decimal point position), and Unit for each Function block.

Note: Scaling Upper/Lower Limit, DP (decimal point position), and Unit are common settings for SP, PV and etc. of the Function block.

(4)Click the ***OK*** button.

10. Saving the Project File

Select ***File*** - ***Save***. All data in the project file (extension: mul. Example: PLC-based Process Control.mul) in the project folder (Ex. PLC-based Process Control) will be saved.

2-5 Transferring the program to the Loop Controller.

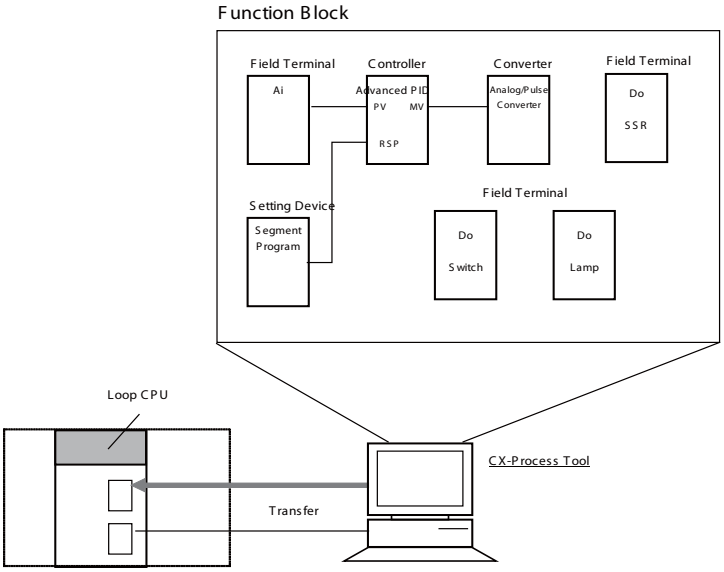

1. Using Serial Communication to connect CX-Process Tool to the CPU Unit

Connect CX-Process Tool to the CPU Unit Serial port (Peripheral or RS232C port).

Connection	Diagram	Network type
Direct serial connection	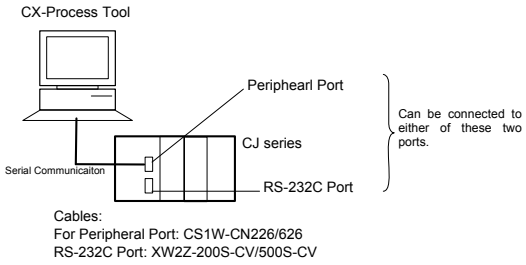	Peripheral Bus (Toolbus): Select Toolbus. Or Host Link: Select SYSMAC WAY

2. Online connection with CX-Process Tool

Take the procedure below to make serial connection between CX-Server and the Loop Controller. The procedure is same as the online connection procedure on the CX-Programmer.

(1)Select ***Settings*** - ***Change PLC***.
(2)***Change PLC*** dialogue box will be displayed.

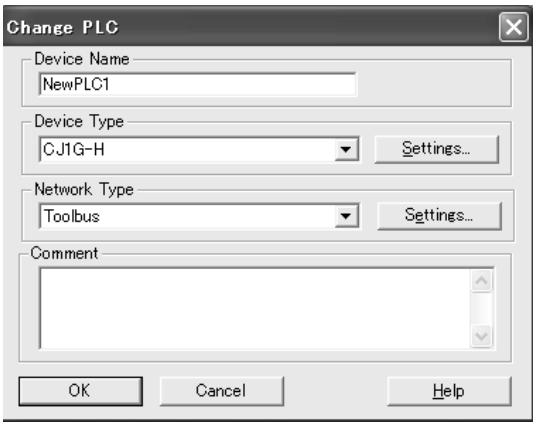

(3)Select ***Device type*** from the Device Type pull-down menu to specify the PLC type to be connected.

PLC series		PLC type to be selected.
Loop-control CPU Unit	CJ1G-CPU42P	CJ1G-CPU42H
	CJ1G-CPU43P	CJ1G-CPU43H
	CJ1G-CPU44P	CJ1G-CPU44H
	CJ1G-CPU45P	CJ1G-CPU45H

(4)Click the ***Settings*** button.
(5)Select CPU type (CPU** in the table above) and click the ***OK*** button.
(6)Select Toolbus or SYSMAC WAY to make serial connection.
a) To connect to the CPU Unit Peripheral port, select ***Toolbus.***
b) To connect using SYSMAC WAY (Host Link: general communication between Personal Computer and PLC), select ***SYSMAC WAY***.
NOTE: When the pesonal computer (CX-Programmer) is directly connected to a network, set the network type. (Ethernet, Controller Link, or etc.)
Refer to "3. Initial Setting of PLC on CX-Programmer".
(7)Click the ***OK*** button.
NOTE: Communication settings must be identical to the settings on the CPU Unit (determined by the dip switches or PLC settings)
To make a direct connection to the PLC, set 0 (default) to the node address in the Network Settings tab of the ***Network Settings***. (The project which was created with the setting above cannot be started, selecting Fins Gateway.)

3. Downloading, Uploading, and Comparing Data

Download the program to the Loop Controller.
The program can be uploaded from the Loop Controller. The program can be also compared to other program file or program stored in the RAM on the Loop Controller.

Downloading (Transfer to LC)

(1)Select a Loop Controller (Ex. LCB03) or Function block. Click on the ***Execute*** - ***Transfer to LC***, or click the icon. ***ALL Clear*** dialogue box will be displayed. (All Clear dialogue box will not be displayed when selected Function block is downloaded.)

(2) To save the program over function block file in the Loop Controller which is connected, click ***OK*** button.

(3)***LCB Download*** dialogue box will be displayed. Select the ***Sending Status*** field.

- Initial setting data (S): Initial settings for each function block ans stap ladder programs
- Operation data (O): Operating parameters for each function block. This cannot be selected for LCU/LCB element downloads.
- Initial setting data+Operation data (S+O): Il the above items (The data in an Loop Controller element in the function block file (.ist) and mnenomic data)

(4)Click the ***Start*** button. A bar will appear to indicate the Sending Status.

Uploading (Transfer from LC)

◆Upload New

To upload a new function block file, create the new function block file by taking the following steps.

(1)Select ***New*** from the ***File*** Menu.

(2)Create a multi-node folder.

(3)Select ***Insert*** - ***Insert Node*** from the ***Settings*** Menu and input the LCU/LCB element name (Loop-control CPU Unit).

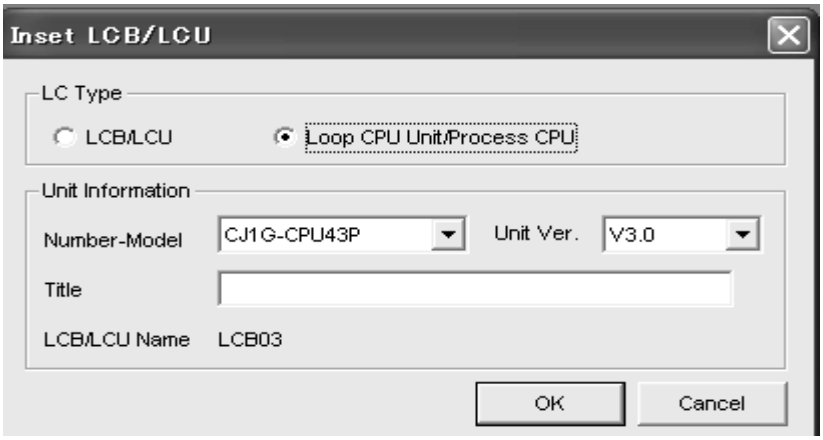

(4)Select ***Network Settings*** from the ***Settings*** Menu to set the network address and node address.

(5)Select the LCU/LCB element. Select ***Transfer from LC*** - ***New*** from the ***Execution*** Menu. Or click the icon.

(6)Click the ***OK*** Button. ***Confirm*** dialogue box will appear.Click the ***OK*** Button.

(7)Click the ***Start*** Button.

(8)The uploading of the new function block file will start. A dialog box will appear while the new

function block file is uploaded.

(9)The box will be closed automatically when processing is completed.

◆Upload Previous

If there is a function block file as a base of the function block data in the LCU/LCB element, the function block data in the Loop Controller will be read. Data can be read in units of LCU/LCB elements or function blocks.

(1)Open the existing file of function block data in the Loop Controller.

(2)Compare the file and the function block data in the Loop Controller.

a)Select the LCU/LCB element or the function block to be refreshed. Select ***Compare*** from the ***Execute*** Menu.

b)Select an LCU/LCB element from the ***File and Block to compare*** field.

c)Set the level to initial setting data and operation data.

d)Click the ***Compare*** Button.

e)Click the ***Start*** Button.

f)Check the comparison results and confirm that the file matches the data in registered function block and block diagram information. If they match, take step 3 below.

(3)Select the LCU/LCB element (LCB01, LCB03, LCB05, LCB05D, and LC001-1 to LC001-3) or the function block to be refreshed and select ***Transfer from LC*** - ***Previous*** from the ***Execute*** Menu.

(4)Click the ***OK*** Button.

(5)Click the ***OK*** Button.

(6)The dialogue box will close when the transfer is completed.

◆Compare

It is possible to compare the data in the currently active function block file and the data in the Loop Controller connected online. The data can be in units of LCU/ LCB elements, sequence control folders in the function block group, or function blocks.

2-6 Test Run with CX-Process Tool.

1. Run/Stop Commands

Take the following steps to execute run/stop commands.

(1)Select ***Operation*** - ***Run/Stop Command*** from the ***Execute*** Menu. The following dialog box will appear.

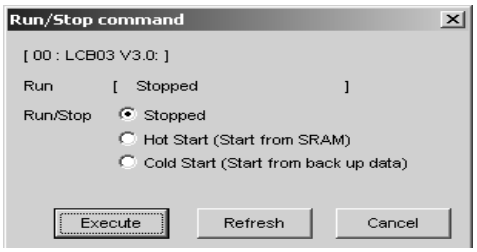

(2)Select Hot Start to hot-start the Loop Control Unit/Board. Select Cold Start to cold-start the Loop Control Unit/Board.

(3)Click the ***Execute*** Button. ***HOT START*** or ***COLD START*** will appear in the ***Run Status*** Field.

(4)To stop operating the Loop Control Unit/Board, select ***Stopped*** and click the ***Execute*** Button.

NOTE: When ERROR CODE is displayed for the opeating condition, check the communication condition.

WARNING

Check the following items before operating the Loop Controller.

- Make sure the Analog I/O Units used with the Loop Controller are properly mounted.
- Make sure the unit numbers on the front panel of the Analog I/O Units coincide with the unit numbers set in the Field Terminal Function Blocks. Data for another Special I/O Unit will be read and written if an incorrect unit number is used.
- Make sure the initial settings in the System Common Block in the Loop Controller are correct. Check that the DM Area words for the Node Terminal Function Block in the CPU Unit of the Loop Control Unit will not be used for any other purpose.

NOTE:

Starting/Stopping Loop Controller Operation (All Function blocks)

There are three ways of indicating run/stop of the Loop Controller (common to all function blocks) when the PLC power is turned ON.

(1)By operating CX-Process Tool (Both run start and stop can be specified.)

(2)By issuing the FINS WRITE ITEM commands (command codes 0241 and 0243 Hex) to change ITEM014 (run/stop command) of the System Common block (Block Model 000)(Both run start and stop can be specified.)

(3)By changing ITEM014 (run/stop command) of the System Common block (Block Model 000) by the ITEM Setting blocks (Block Models 171 and 172). (Only run stop can be specified.)

NOTE:

a) ITEM014 of the System Common block cannot be set to 1 (hot start) or 2 (cold start) by ITEM Setting blocks. Only 0 can be set.

b) Setting to a hot start or cold start is not accepted if these modes are instructed while the Loop Controller is already running.

c) ITEM014 (run/stop command) of the System Common block (Block Model 000) cannot be changed directly by the Step Ladder Program block (Block Model 301). It is changed via the ITEM Setting blocks.

NOTE:

Stop/Start Block Operation

Each Function block operation can be stopped or started.
Use any of three procedures written below:

- Operation from CX-Process Tool (In Block Diagram Validate Action Mode. Both of Stopping and Starting)
- Send FINS Command, Write ITEM Command (Command Code 0241/0243Hex) to change the value in ITEM000 (Stop blockoperation). (Both of Stopping and Starting)
- HMI Function

It is not possible to start the operation of each Function block in Cold start by resetting operation stop. The operation is started in Hot start mode.

NOTE:

Hot Start and Cold Start

- Hot Start

Use the Hot start mode when it is preferable to continue operations after a short power interruption, or it is necessary to use the same Remote/Local setting, MV output value, and Auto/Manual setting that existed before the power went OFF.
Hot starts are not performed and cold starts are performed after power interruption of 24 hours.

- Cold start

When operation is started in Cold start mode, the memory area used for operations, as well as the MV output, Auto/Manual switch, and Remote/Local switch settings are initialized when the Loop Controller is restarted. (PID block restarts operation in Manual mode, with MV=0% and Local SP).
Use the cold start mode when it is not necessary to continue operation with the same values that existed before the power was turned OFF and it is acceptable for the controller to start operation with the following settings: Local SP, MV = 0, and Manual mode.

2. System Operation Check

It is possible to monitor or control the status of System Common Block of the Loop Controller. The following items can be monitored or controlled. This function is mainly used for checking the load rate or execution errors.
Monitor items:Present load rate, maximum load rate, operation cycle automatic change flag, minimum block address with an execution error, execution error code of each block address, block address with a database error, battery error, and ITEM data for System Common Block.
Control items:Maximum load rate and resetting operation cycle automatic change flag.

CAUTION

Check the system operation of created Function block data on CX-Process Tool before starting actual operation. Especially check if load rate of the Loop Controller is 80% or less. (Refer to ***Appendix3-6 Load Rate of the Loop Controller*** for detailed infotmation about load rate).

Take the following steps to monitor the run status of System Common Block of the Loop Controller.Select ***Operation*** - ***Monitor Run Status*** from the ***Execute*** Menu. The dialog box below will appear.

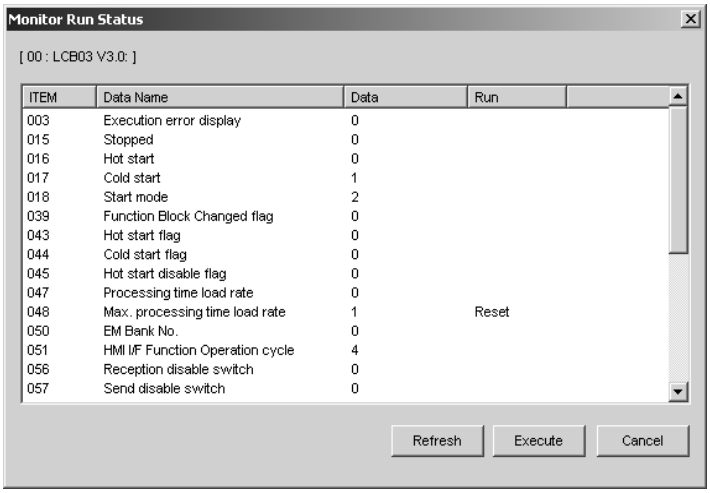

ITEM	Data Name	Data	Run
003	Execution error display	0	
015	Stopped	0	
016	Hot start	0	
017	Cold start	1	
018	Start mode	2	
039	Function Block Changed flag	0	
043	Hot start flag	0	
044	Cold start flag	0	
045	Hot start disable flag	0	
047	Processing time load rate	0	
048	Max. processing time load rate	1	Reset
050	EM Bank No.	0	
051	HMI I/F Function Operation cycle	4	
056	Reception disable switch	0	
057	Send disable switch	0	

- Operating condition of the Loop Controller system is displayed under the ***Data Name*** column.
- The values under the Data column are recorded when the ***Monitor Run Status*** Dialog Box is opened.
- To refresh the data with the dialog box displayed, click the ***Refresh*** Button.
- To execute the ITEM displayed under the ***Run*** column, select the ITEM and click the ***Execute*** Button.
- For a Loop Controller, the processing time load rate/maximum control load rate indication (Loop Controller's load rate/maximum load rate) for the overall Loop Controller for each operation cycle block (e.g., ITEM 047/ITEM 048), are indicated in1% units. The data range is 0 to 100 (unit: 1%).

ITEMs Marked "Reset"

ITEM	Data Name	Data	Run
047	Processing time load rate	4	
048	Max. processing time load rate	4	Reset
050	EM Bank No.	0	
051	HMI I/F Function Operation cycle	1	
056	Reception disable switch	0	

ITEMs remarked ***Reset*** can be set to 0 (reset). Select the ITEM and click the ***Execute*** Button. The following dialog box will appear. Click the ***OK*** Button.

ITEMs Marked "Detailed Display"

093	Min. block addr.:Execution error	000	Detailed Display
094	Min. block addr.:Database error	000	Detailed Display

The details of ITEMs remarked ***Detailed display*** can be changed through the ***Execution*** Menu.
Example: Minimum block address with an execution error resulted

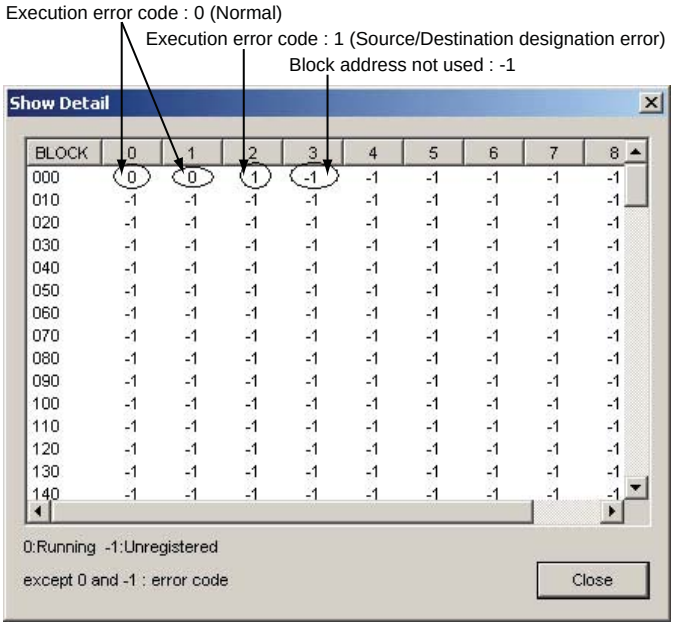

NOTE: Operation of the block in which execution error occurs will be stopped. Outputs before the error occurrance will be held.

The error code (i.e., the value stored in ITEM003) for each function block will be displayed in the block address with the vertical row specifying the 10's digit in the block address and the horizontal row specifying the 1's digit in the block address.
-1: Block address not used
0: Normal (Execution error code)

Other (1 to 89): Error (Execution error code)
For details on execution error codes, refer to the ***7-1: Errors and Alarm Troubleshooting*** in the Operation Manual for the Loop Controller, or ***Appendix A: Execution Error Code List*** of the ***Function Block Reference Manual (Cat. No. W407)***.

3. Operation Check

This section provides information on how to check the operation of the function block data in the Loop Controller. The following two types of checks are possible.

(1)Monitoring ITEM Data for Selected Function Blocks
(2)Downloading individual ITEM Data settings
(3)Operation Check of Block Diagrams
Checks if analog connections have been properly done.It is possible to apply forced set/reset to analog signals.
(4)Operation Check of Sequence Tables or Ladder Diagrams
Checks sequence tables or ladder diagrams execution.It is possible to apply forced set/reset to contact ITEMs.

CAUTION

- Compare the currently opened function block file and the function block data in the Loop Controller before checking the operation of the function block data. If the relationship between the block address and block model of the registered function block is incorrect, the operation of the function block data cannot be checked.The operation of the function block data is checked according to the block address and ITEM numbers. If the function block file is different from the function block data in block model, the operation of the function block data will still be checked as long as the function block file is the same as the function block data in block address.
- Analog or contact signals may be forcibly changed through the monitoring control of function block data. You must, however, confirm the safety of the whole system, otherwise the system or machine may operated unexpectedly.

Monitoring ITEM Data for Selected Function Blocks

The ITEM data for a specified function block can be read from a Loop Controller and displayed.

(1)Select a function block that has been pasted.

(2)Click the right mouse button to display the pop-up menu and select ***Monitor*** - ***ITEM List***. The following dialog box will be display and the ITEM data can be monitored.

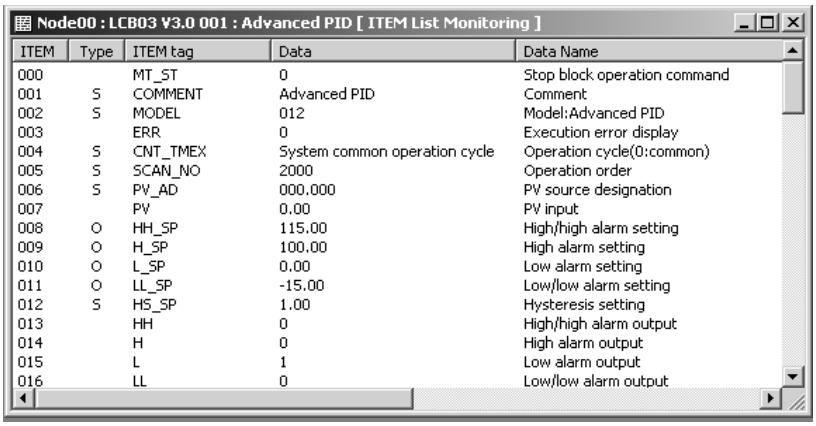

ITEM	Type	ITEM tag	Data	Data Name
000		MT_ST	0	Stop block operation command
001	S	COMMENT	Advanced PID	Comment
002	S	MODEL	012	Model:Advanced PID
003		ERR	0	Execution error display
004	S	CNT_TMEX	System common operation cycle	Operation cycle(0:common)
005	S	SCAN_NO	2000	Operation order
006	S	PV_AD	000.000	PV source designation
007		PV	0.00	PV input
008	O	HH_SP	115.00	High/high alarm setting
009	O	H_SP	100.00	High alarm setting
010	O	L_SP	0.00	Low alarm setting
011	O	LL_SP	-15.00	Low/low alarm setting
012	S	HS_SP	1.00	Hysteresis setting
013		HH	0	High/high alarm output
014		H	0	High alarm output
015		L	1	Low alarm output
016		LL	0	Low/low alarm output

Downloading Individual ITEM Data Settings

It is also possible to change a single ITEM's data and download that ITEM's data to the Loop Controller, but only operation data (Type O in the ITEM List) can be downloaded this way.

(1)Double-click the ITEM that you want to change. A setting dialog box like the one in the following diagram will be displayed.

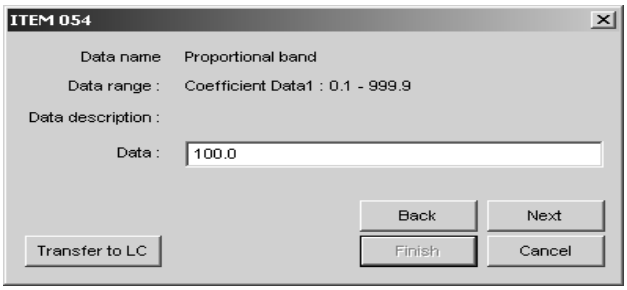

(2)Change the data to the desired value and click the ***Transfer to LC*** Button.The changed value will be displayed in the ITEM List.

Block Diagram Check

This section provides information on how to check the block diagrams connecting the function blocks of a Loop Controller. The following data on the function blocks, excluding step ladder programs, will be displayed or set.

- Display of analog signal values
- Forced change of analog output signals
- Stop block operation/Cancel stop command for each function block

Changing to Block Diagram Validate Action Mode

Take the following steps to change the CX-Process Tool to Validate Action Mode.

(1)Select the block diagram folder and select ***Edit*** - ***Block Diagram*** from the ***Settings*** Menu. The block diagram will appear.

(2)Select ***Start*** from the ***Validate Action*** Menu. The following screen will appear and the cursor will change to the icon.

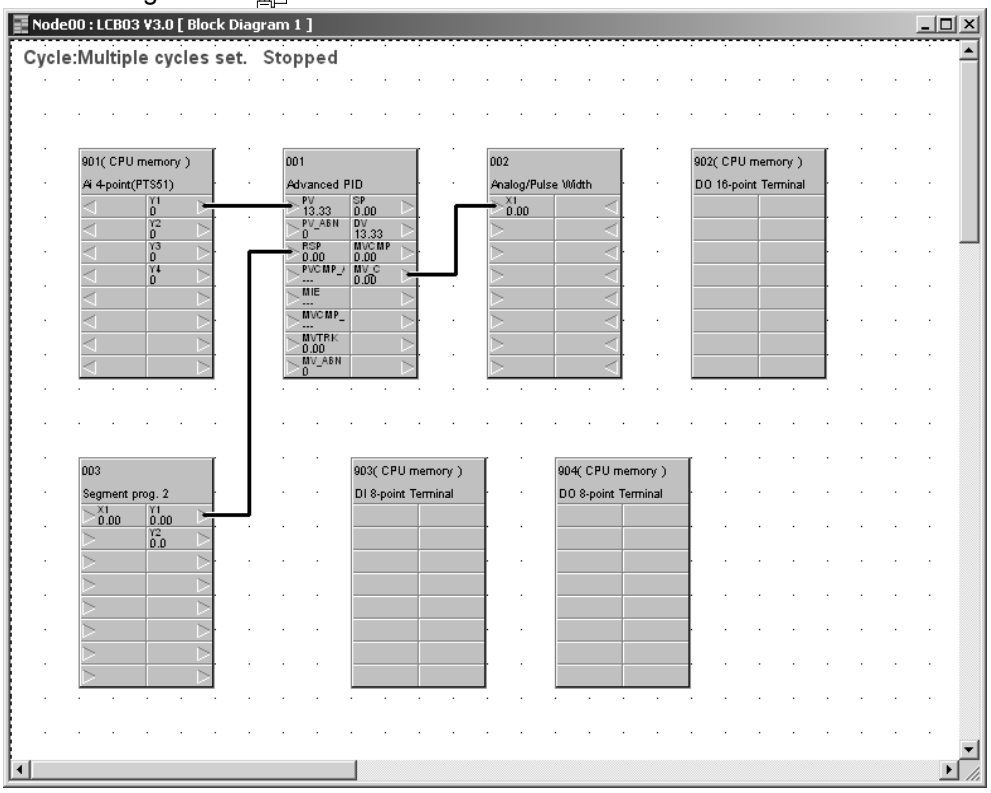

Connection Check

Check items 1 and 2 below to determine if the function blocks are connected correctly.

(1)Output value of the Source Function Blocks.

In this example, check on the output side (right side) of the function block that output Y of the source Square Root Block is 89.44.

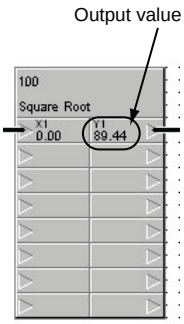

(2)Input Value

Double-click the destination function block. The following ***Send*** Dialog Box will appear.

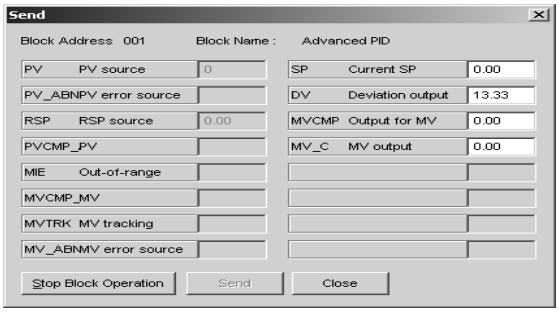

Check the input value in the dialog box.

Stop Block Operation Command for each Function Block

From the above Validate Action Screen, the stop block operation command can be sent to each function block.

Take the following steps to execute the stop block operation command.

Command for each Function Block

(3)Double-click the function block.

Example:

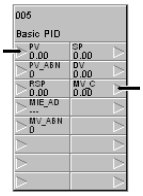

The following Send Dialog Box will appear.

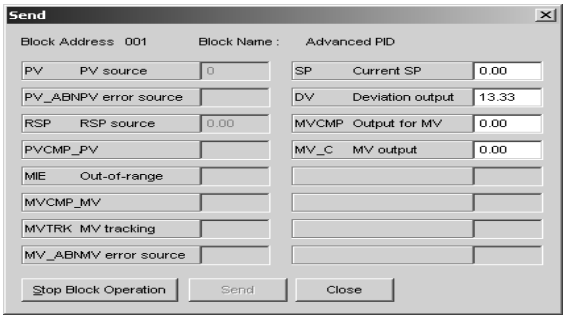

(4)Click the ***Stop Block Operation*** Button. The operation of the function block will stop and ***Stopped*** will appear at the top of the function block.

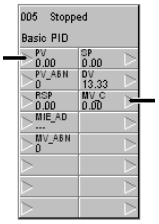

Ladder Diagram Operation Check

The following description provides information on how to check the operation of ladder diagrams for the Loop Controller in Validate Action Mode.
The following data of step ladders (block model 301) will be displayed or set.

- Display of the status of contact ITEM
- Force set or reset of contact ITEM
- Stop block operation/Cancel stop of function blocks incorporating contact ITEMs

Take the following steps to change the CX-Process Tool to Validate Action Mode.

(1)Select the block diagram folder and select ***Edit*** - ***Step Ladder Program*** from the ***Settings*** Menu. The ladder diagram will appear.

(2)Select ***Start*** from the ***Validate Action*** Menu. The following screen will appear and the cursor will change to the icon.

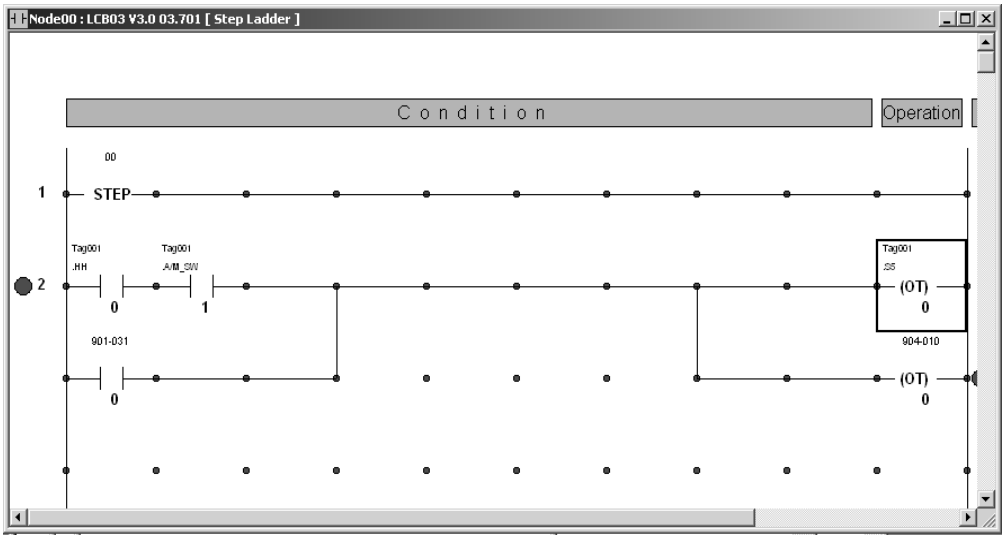

4. Tuning

PID constants, SPs, and other settings listed below can be changed online.

- Parameters such as the PID Block's P, I, and D constants, and the alarm set values can be set.
- The PV, SP, and MV trends can be adjusted while monitoring.
- If an alarm occurs, the bar graph color changes.

With CX-Process Tool version 3.2 or higher, specified ITEMs in function blocks being displayed on Tuning Screens can be logged and output to CSV files.

Switching to the Tuning Screen

Use the following procedure.

(1)The Tuning Screen will be displayed. The following settings can be displayed and set.

(2) Select the function block to be tuned and select ***Monitor*** - ***Tuning Screen*** from the ***Execution*** menu.

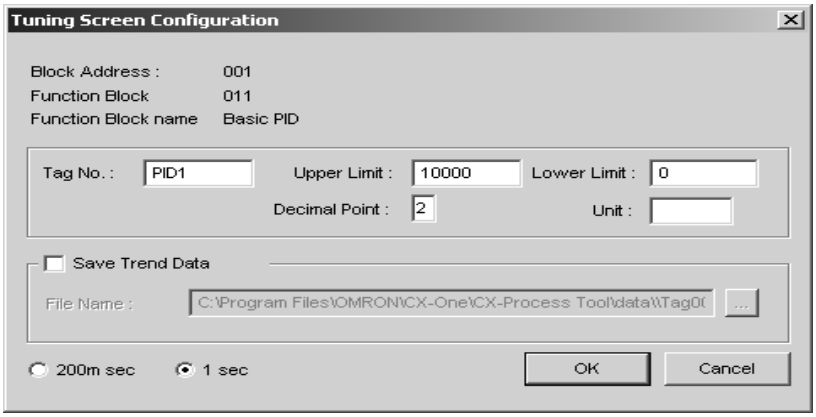

Use this dialog box to input settings for the function block, including the Tag name, Scaling range (Scaling Upper Limit and Scaling Lower Limit), Decimal Point, and Unit. (See note a and b) With version 3.0 or later of the CX-Process Tool, the monitoring cycle for data (such as PVs, SPs, and alarms) on the Tuning Screens can be set to 1 s or 200 ms. (With unit Ver. 2.5, the cycle was fixed at 1 s.) (See note c and d.) Select either 1 s or 200 ms before clicking the OK Button.

Note:

a) The Scaling range (upper limit and lower limit), Decimal point position, and Units settings apply to all of the function block's SP and PV values.

b) Values which are set in the CSV tag are indicated.

c) This setting is also used for the data logging cycle.

d) Setting the data monitoring cycle to 200 ms does not necessarily mean that the refresh cycle will be 200 ms because the load on the computer and other factors will affect it. Use this setting as a guideline only.

Select the Save Trend Data to log data and save it in a CSV file. The default location for the CSV file is in the current directory with a file name of CSVTagNameInFunctionBlock_PresentTime.csv. The present time is in the form YYYY/MM/DD_HH/MM/SS. Click the ***Browse*** Button to change the save location.

(3)The Tuning Screen Configuration Dialog Box will be displayed.The following settings in the table below can be displayed and set.

Block name (model)	Signal source Function Block or ITEM
Target function block	Control Block: Basic PID (011), Advanced PID (012), Batch flow-rate capture (014),Indication and Setting (031), Indication and Operation (032), Ratio Setting (033),Indicator (034), blended PID (013), 2-position ON/OFF (001), 3-position ON/OFF (002),Segment Program 2 (157)
Display Example: Basic or Advanced PID	SP, PV, and MV trends Setting values for P, I, D, and MV limit High/Low, High/High Alarm, High Alarm, Low Alarm, Low/Low Alarm, and Deviation Alarm. Alarm OFF switch, Stop block operation command, SP, PV, MV, and A/M status, R/L status (See note 1.), bar color change if alarm occurs.
SettingsExample: Basic or Advanced PID	Setting values for P, I, D, and MV limit High/Low, High/High Alarm, High Alarm, Low Alarm, Low/Low Alarm, and Deviation Alarm. Alarm OFF switch, Stop block operation command SP, MV (manual mode only), A/M switching (See note 1.), R/L switching (See note 1).

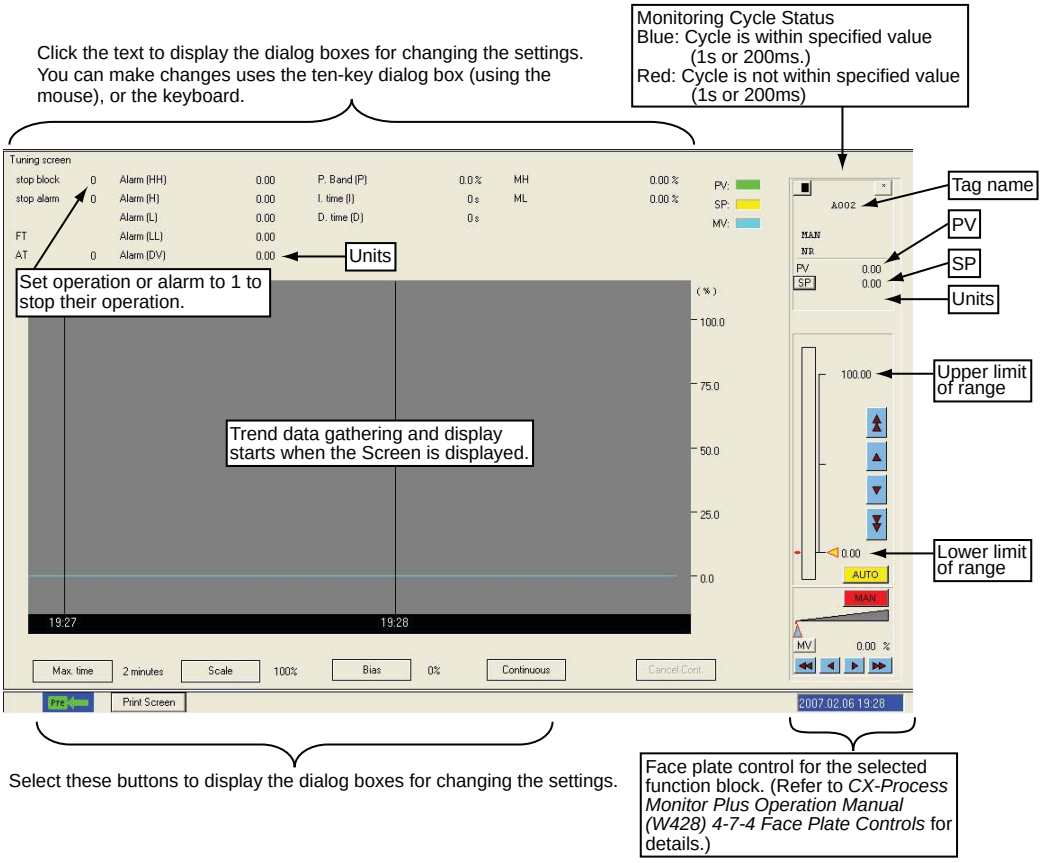

(4)To close the Tuning Screen, click the X Button in the upper-right corner of the window. If data logging is being performed at the time, the logging file will be saved when the Tuning Screen is closed.

information

With CX-Process version 3.2 or later, up to four Tuning Screens can be opened at the same time. Opening more Tuning Screens, however, will increase the communications load and can cause large errors in the data monitoring/logging refresh cycle.

Executing Auto-tuning (AT)

It is possible to automatically calculate and store the PID constants used for Basic PID (011) or Advanced PID (012). This function is called auto-tuning (AT). For details of the AT function, refer to the section on Basic PID (011) in the Function Block Reference Manual for the Loop Controller (Operation Manual of the Loop Controller: W375, Function Block Reference Manual of the Loop Controller: W407). AT can be set in the same way as the other settings, as shown below.

(1)If the value for AT displayed in the upper-left region of the Tuning Screen is 0, then AT is not being executed.

(2)Click ***AT***. The ***Change Data*** Dialog Box shown below will be displayed.

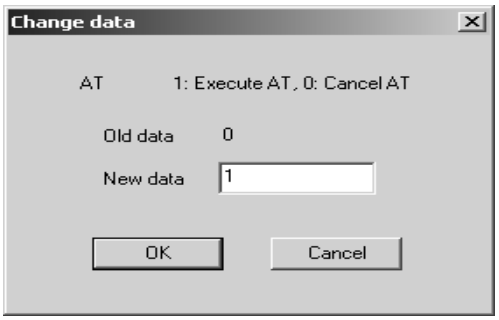

(3)To execute AT, input 1 in the ***New Data*** Field.

(4)Click the ***OK*** Button. AT will be executed (see note). The value for AT displayed in the upper-left region of the Tuning Screen will change to 1.

(5) When the PID constants have been calculated and stored and AT has been completed, the value for ***AT*** displayed in the upper-left region of the Tuning Screen will return to 0.

NOTE: Execution of AT can be cancelled from the above dialog box by inputting 0 in the New Data Field and clicking the OK Button. (The value for AT displayed in the upper-left region of the Tuning Screen will return to 0.)

Executing Fine Tuning

Fine tuning (FT) can be executed for either Basic PID (011) or Advanced PID (012). Fine tuning lets the user use fuzzy logic to set PID constants as required for more accurate control.

(1)Click ***Execute FT*** at the upper left portion of the Tuning Screen, as shown below.

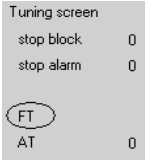

(2)The following ***Execute FT*** Dialog Box will be displayed.

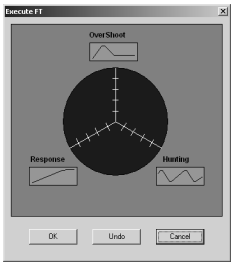

(3)Set the degree of ***Response improvement, Overshooting control***, and ***Hunting control*** to any of the five levels and then click the ***OK*** Button.

NOTE: Fine tuning will be executed with the settings in the ***FT Execution*** Dialog Box each time that the ***OK*** Button is clicked. The ***Undo*** Button can be clicked to return to the previous PID constant settings. (The previous PID constant settings will be restored if the Undo Button is pressed a second time.)

(4)Fine tuning will be executed according to the settings that were input.The PID constants adjusted with fine tuning will be stored automatically and the new values will be displayed at the top of the Tuning Screen. The proportional band, integral time, and derivative time settings will change.

information

Execute fine tuning when the control performance produced by autotuning is not acceptable, when autotuning produces instability in the PV, or when you cannot allow control to be interrupted.Fine tuning improves control by automatically setting PID parameters using the three user settings listed below.

- Hunting
- Overshooting
- Responsiveness

Either one or two of the user setting can be set to any of five adjustment levels.For example, to better control hunting and overshooting, the Overshoot and Hunting parameters can be set to to the desired levels.

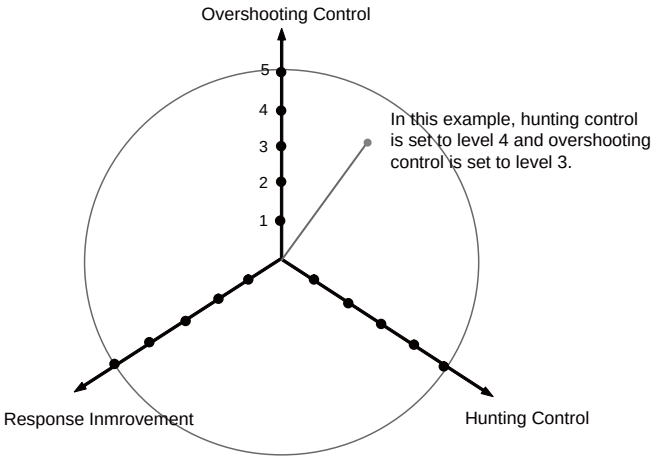

Changing P, I, and D

The following example shows how to change P (the proportional band).

(1)Click ***Proportional Band (P)*** displayed in the upper center of the screen.The ***Change Data*** Dialog Box will be displayed.

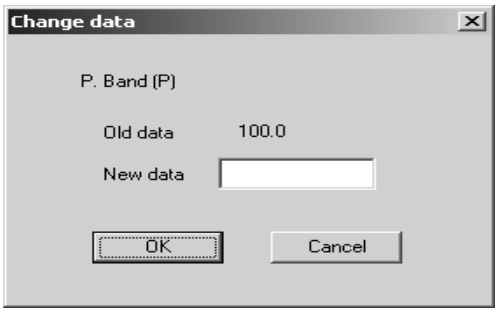

(2)Click the ***New data*** input field.The ***Input Data*** Dialog Box (ten-key) will be displayed as shown.

(3)After using the mouse (or the keyboard) to enter a numerical value, click the ***OK*** Button or press the ***Enter*** Key. The display will return to the ***Change Data*** Dialog Box shown in Step 1.

(4)Click the **OK** Button.The settings for ***I (integral time)*** and ***D (differential time)*** can be changed in the same way.

2-7 Creating Monitor Screen for NS Series PT.

When monitoring the Loop Controller on the NS series PT, "NS Face Plate Auto-Builder for NS" is useful. NS screens can be automatically built from the CSV tag file created by the CX-Process Tool. To utilize CX-Process Monitor PLus for monitoring, see ***Appendix3-3 Monitoring by CX-Process Monitor Plus.***

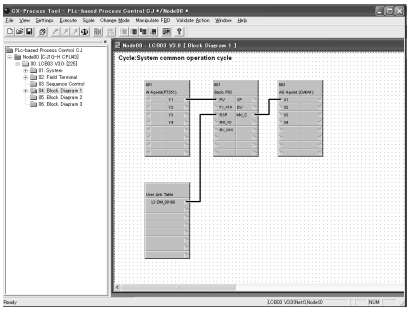

CX-Process Tool
Create program for the Loop Controller and outputs CSV tag data.

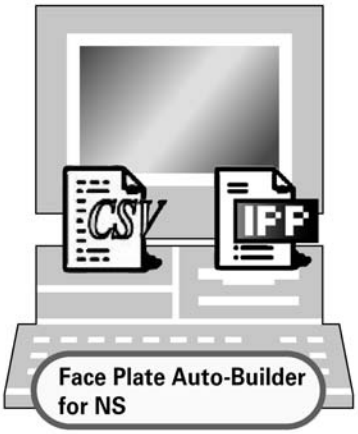

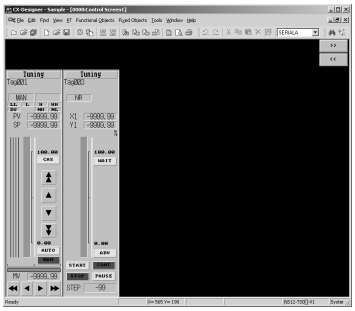

CX-Designer
Screen builder for NS. Edit output data and settings for other necessary screens.

NS screens can be built following the procedure below.

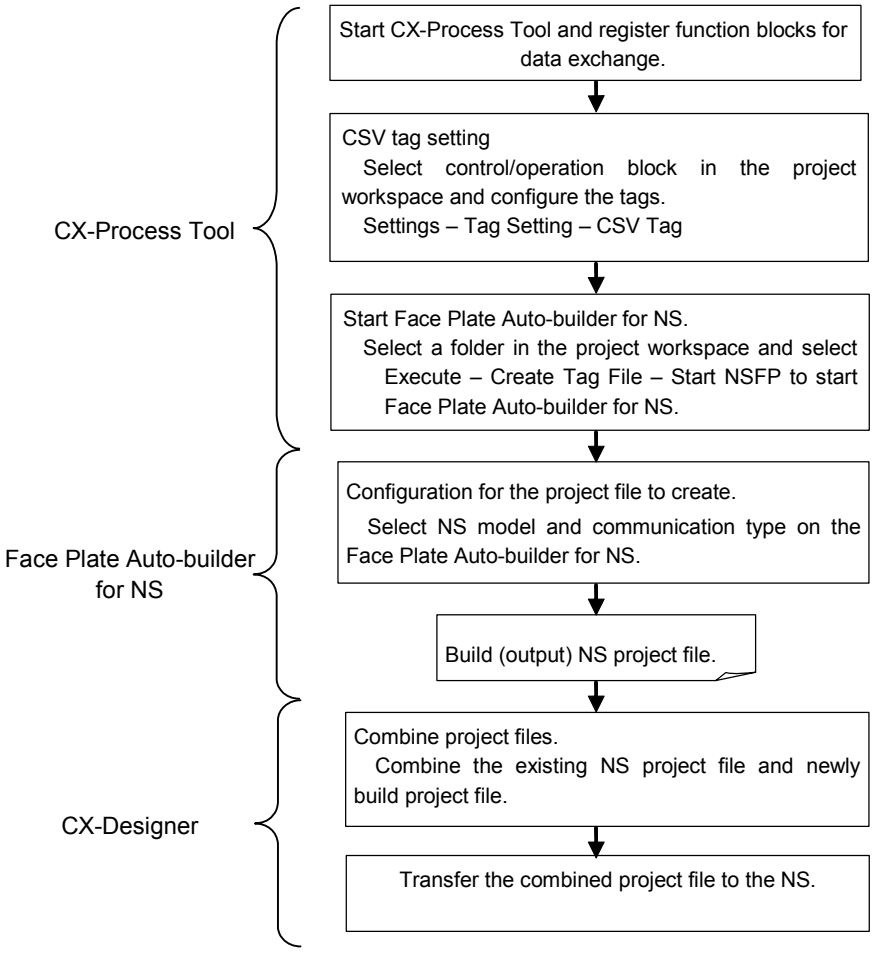

1. Automatically Creating NS Project with Face Plate Auto-Builder for NS

This section describes the procedures to generate CSV Tag file on the CX-Process Tool and automatically create a project file for NS using Face Plate Auto-Builder for NS.

(1)Register function blocks on the CX-ProcessTool and set CSV tags for each function block. Select ***Create Tag File - Start NSFP*** from the ***Execute*** Menu.

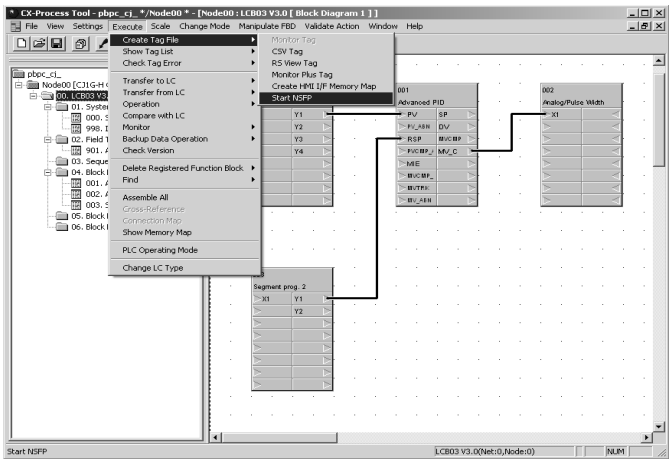

(2)***CSV Tag Compile*** dialogue box will be displayed. Click the ***OK*** button.

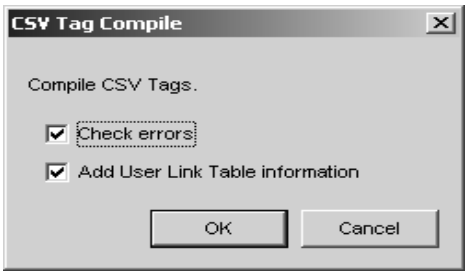

(3)Specify file name and save the CSV file.

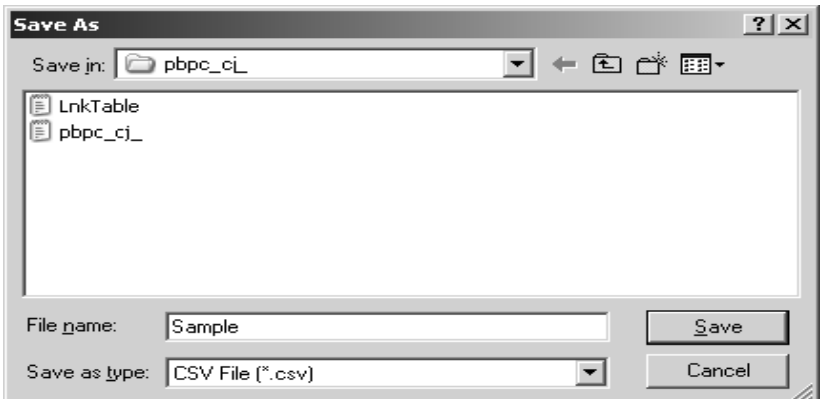

(4)When the file save is completed, ***Confirm*** dialogue box will be displayed. Click the ***OK*** button.

(5) When the tag compilation has been completed normally, the NSFP will start automatically. The condition settings for the NSFP will be displayed. Enter the conditions and click the ***Build***.

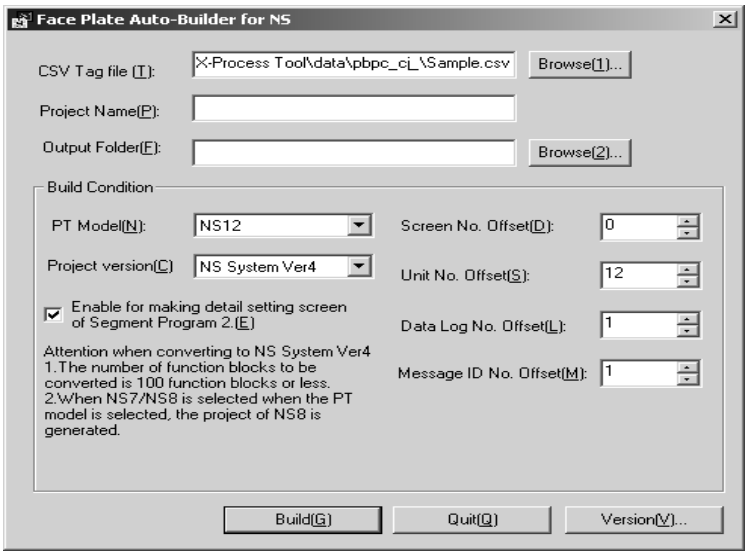

Description of NS face plate auto-builder dialogue box

Items	Description
CSV Tag File	Set the folder location and file name of the CSV tag file from which the project will be built. Click the Browse (1) Button to display a dialog box for selecting the CSV tag file.
Project Name	Set the name of the CX-Designer project file to be created (up to 38 characters).
Output Folder	Set the folder that will output the CX-Designer project file. Click the Browse (2) Button to display a dialog box for selecting the folder that will output the project.
PT Model/Project Version	Select the model of the NS-series PT and the system version from the table below. See Note1.
Enable of Making Detail Setting Screen of Segment Program 2 (Project Version 4 Only)	If this option is selected and a Segment Program 2 function block is used, detail setting screens (time width-output setting screen and weight width setting screen) to set the Segment Program 2 parameters will be built automatically.
Screen Number Offset	Set the first screen number in the NS-series PT. Starting from the specified screen number offset, screen numbers are assigned to the Control Screens (up to 25 screens) and Tuning Screens (up to 100 screens) in that order.
Unit Number Offset	Set the first number allocated from the Unit and Scale No. data in the Nsseries PT. Unit and Scale No. data items for the NS-series PT Numeral Display and Input objects are created automatically by Face Plate Auto-Builder for NS from the scaling upper/lower limit and unit characters. If version 2 is selected, up to 66 Unit and Scale No. data items will be created from the first number tag set here. If version 4 is selected, up to 202 Unit and Scale No. data items will be created.
Data Log Number Offset	Specify the first number allocated to the data log group in the NS-series PT.
Message ID Number Offset	Specify the first number allocated for confirmation messages in the NS-series PT.

Model	Project Version(System Version)	Max. loop number
NS7	NS System Ver2	32
NS8	NS System Ver4	100
NS10	NS System Ver2	32
	NS System Ver4	100
NS12 (Default)	NS System Ver2	32
	NS System Ver4	100

NOTE: Maximun loop number changes with the system versions.

(6)When ***Build*** button to start automatic screen building is clicked in Step5, following dialog box will be displayed.In this example,set the ***Host registration*** to create NS project file from the CX-Process project.

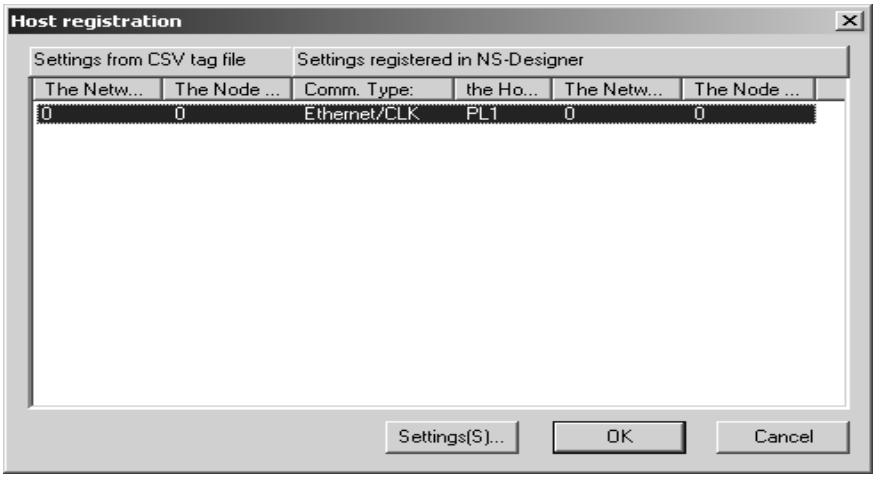

Select the host in the ***Host regisgtration*** dialog box and click the ***Settings*** Button. The following dialog box will be displayed. Set the required items. The settings and display is described in the following table.

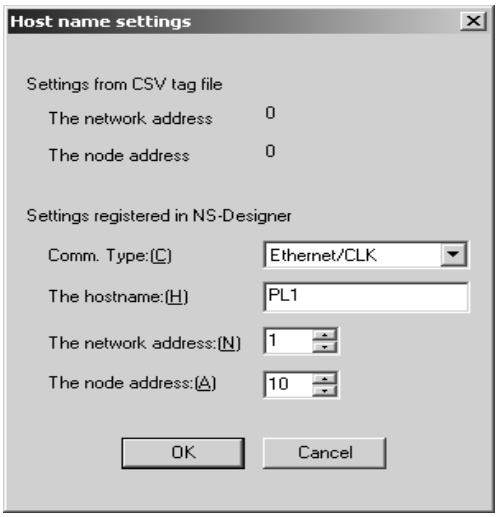

Description of Host name setting dialogue box

Item		Description
CSV tag file settings	Network address	Displays the network address given in the CSV tag file.
	Node address	Displays the node address given in the CSV tag file.
Settings registered in CX-Designer	Communications connection method	Set the node (host) connection method. Any of the following three methods can be set: Serial port A, serial port B, Ethernet/CLK. Example: If the node is connected to serial port A, select Serial port A. Note: The host name, network address, and node address cannot be set if serial port A or serial B is selected. ·Serial Port A Settings Host name: SERIALA Network address: 111 Node address: 1 ·Serial port B Settings Host name: SERIALB Network address: 112 Node address: 1 Note: When Ethernet/CLK is selected, the PLC type registered in the NS-Designer will always be SYSMAC-CS1.
	Host name	Set the host name. ·The host name must be all-caps. ·The host name can be up to 16 characters long. ·The same host name can be used only once. ·The host name, network address, and node ·Address cannot be set if serial port A or serial B is selected as the communications connection method.
	Network address	Set the network address of the node (host) as viewedfrom the NS-series PT. ·The network address will be 111 or 112 if serial port A or serial B is selected as the communications connection method.
	Node address	Set the node address of the node (host) as viewed from the NS-series PT. ·The node address will be 1 if serial port A or serial B is selected as the communications connection method.

(7)Click the ***OK*** button to complete the NS face plate screen creation.

(8) When the project is normally created, Build completed dialogue box shown below will be displayed. Click the ***OK*** button to complete the automatic creation of project file for CX-Designer.

2. Screens created by Face Plate Auto-Builder for NS

Screens below will be automatically created when completing the procedures written above.

- Control Screen (Face plate for Advanced PID and Segment Program)

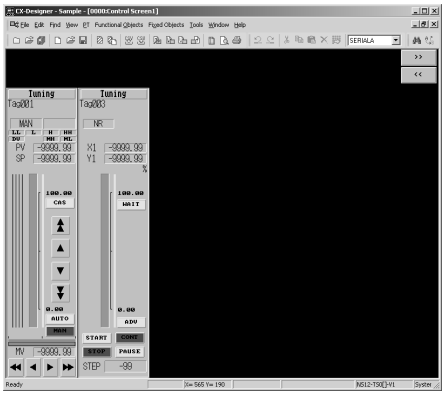

- Tuning Screens

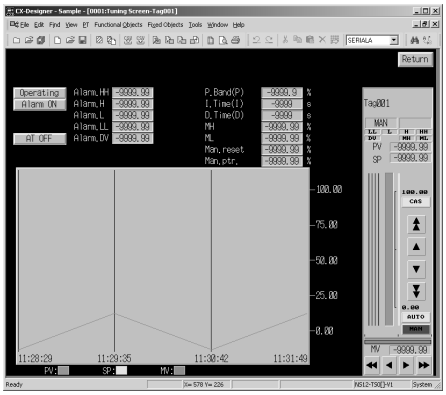

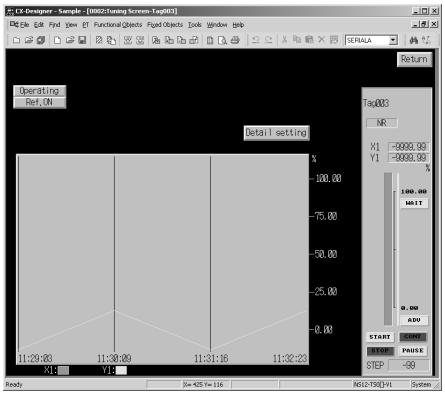

- Detail Setting Screen for Segment Program 2

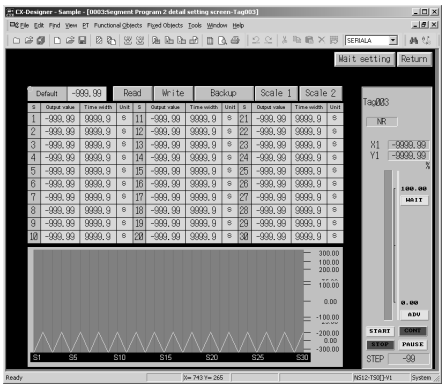

♦Wait Width Setting Screen for Segment Program 2.

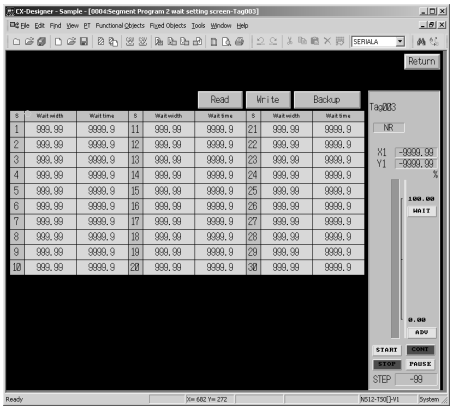

3. Merging the Project Files

Add the screens which are automatically created by the Face Plate Auto Builder for NS to the existing project file.

(1)Import the existing project file onto the CX-Designer.

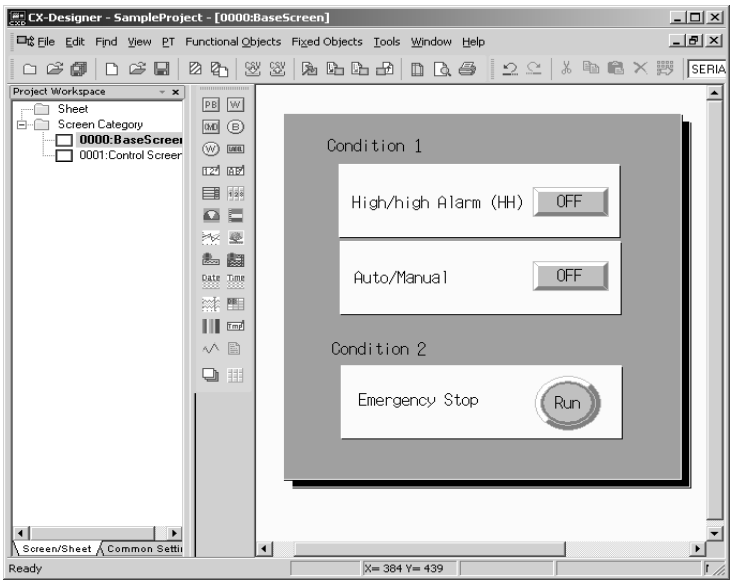

(2)Open the project file which was automatically created, separately on the CX-Designer.

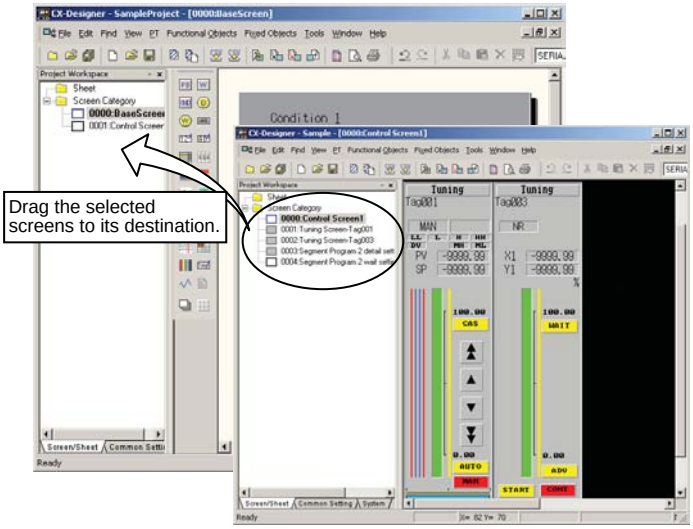

NOTE:

a) Here, two CX-Designers were started.

b) The existing project file must be created on the CX-Designer of higher version than that of newly created poject file by the Face Plate Auto-Builder for NS. If the existing project file is created on the former version, convert the project file by selecting ***Tools - Convert - Version.***

(3)Drag and drop the screens in the poject file which was automatically created to the existing project file.

(4) The diaglogue box below to confirm if the file is to be saved. Click the ***OK*** button.

(5)The dialogue box to set the screen No. to be paste in the base project will be displayed. Set the screen No. and click the ***OK*** button.

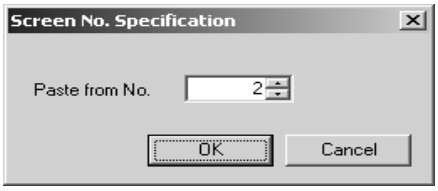

(6) Host Selection dialogue box will be displayed.Source is the project created by the Face Plate Auto-Builder for NS. Destination means the existing project file. Select the Host of Source project file accoding to the Destination project file.

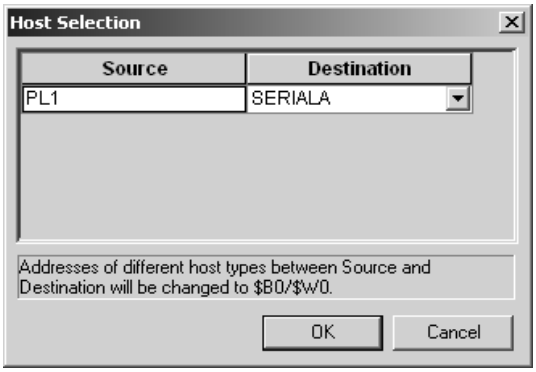

(7)Click the OK button to complete the merging.

4. Initial Setting for Communication between NS and PLC

Initial settings by the CX-Designer (Settings for the project)

Connecting PLC and PT via Serial Port A or Ethernet

Settings		Procedure
System Tab	1) Communication Setting	1. Select Communication Setting from the System tab in the project workspace. 2. In the Comm. Setting dialogue box, select Comm-All. 3. Set the following: ·Comm. Time Out ·Retry Counts ·Comm. Auto-return ·Intervals of Message Comm. ·Routing Table Setting
	2) Communication Port Setting	•Serial Communication 1. Select Serial Port A in the Comm. Setting dialogue box. 2. Register PLC in the pull-down menu of the Serial Port. Others are default setting. •Ethernet 1. Select Ethernet in the Comm. Setting dialogue box. (Settings for the Source (NS)) ·Network Address:1 Set the NS FINS Network Address ·Node Address:3 Set the NS FINS Node Address ·UDP Port No.: 9600 ·IP Address: 192.168.250.3, Subnet Mask: 255.255.255.0 Set the NS IP Address ·Conversion Table: None 2. In the Comm. Setting dialogue box, right-click on the Ethernet and select Add. (Settings for the destination (PLC)) ·Host Name: PL10 User-defined name (16 characters max.) ·PLC type: SYSMAC-CS1 Set the PLC type to communicate. ·Network Address: 1 Set the NS FINS Network Address. ·Node Address:1 Set the Destination (PLC) FINS Node Address

Initial settings of NS series PT System Menu (Settings for NS series PT)

Settings	Procedure	
Communication Setting	1. Press two of the four couners of the NS series PT.	
	2. Select the Comm. Tab in the System Menu.	
	3. Enable/Disable setting and etc., for Serial/ Ethernet/ Controller Link ports.	
	Serial Communication:	For NT Link 1: N, set the unit number and communications speed.
	·Serial Port A: NT Link 1:1/ NT Link 1:N/ Bar code reader/ Disable	
	·Serial Port B: NT Link 1:1/ NT Link 1:N/ Bar code reader/ Disable	
	Ethernet	·Network Add (1 to 127):1
	·Ethernet: Enable/ Disable	·Node Address (0 to 254): 3
		·IP Address: 192.168.250.3
		·Sub-net Mask: 255.255.255.0

5. Transfer to NS

Transfer the data from the CX-Designer to the NS. (Or, save the data in the memory card and insert the memory card into the NS.

Settings	Procedure
Transferring the projectdata to the NS series PT.	Quick Transfer (To PT) 1. Click on the ***PT - Transfer - Quick Transfer (To PT)***, or ***Transfer (To PT)***. 2. Click the ***Setting*** button in the ***Transfer Setting*** Dialogue box. 3. Specify Comms. Method from Ethernet, Serial, and Memory Card in the ***Comms. Method*** dialogue box. 4. When specifying Ethernet, set the node address of destination NS series PT. 5. Click the ***OK*** button after completing the transfer setting. 6. Click the ***Yes*** button in the dialogue box to confirm the data transferring.
	Select Transfer Program from the Transfer Programs. 1. Click on the ***PT - Transfer - Transfer Program***. 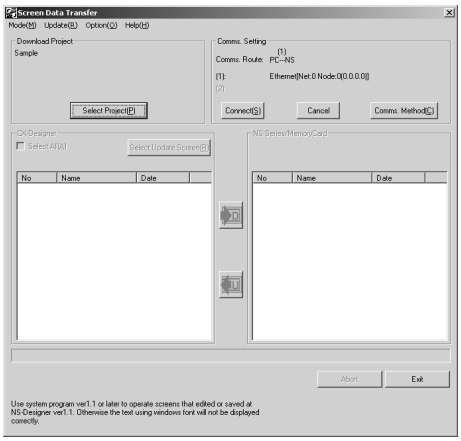 2. In the ***Screen Data Transfer*** dialogue box, Select the project from the ***Mode*** menu. 3. Click the ***Comms. Method*** button and select the Comms Method. After completing the setting, click the ***OK*** button. 4. Click the ***Abort*** button.

6. Monitoring and Tuning on the NS

Run the system to monitor and tune ths system from the NS.

NOTE:

Creating the NS screens

User screens can be created by the CX-Designer:

(1)Modifying the screens which are automatically built by the Face Plate Auto-Builder for NS.
Color, size and shape can be changed. The Control Screen and Tuning Screen which are automatically built are created as a group; therefore, ungroup it and specify the part to modify. When the setting of address or scaling macro is changed, the part may not operate normally. See the operation manual for the reference.

(2)Creating new screens
Set the touch panel address in the CPU Memory which is allocated for HMI I/F. The area which is allocated for the HMI I/F can be output as the CSV tag file by the CX-Process Tool. To output as a tag file, click on the ***Eexcute - Create Tag File - Create HMI I/F Memory Map***.

SECTION 3
Appendix

3-1 HMI Function 3-1
3-2 Connections via Ethernet 3-5
3-3 Monitoring by CX-Process Monitor Plus 3-12
3-4 Scaling 3-37
3-5 Order of Operations 3-42
3-6 Load Rate of the Loop Controller 3-43
3-7 External I/O Response Time 3-45
3-8 Errors and Alarm Troubleshooting 3-46
3-9 Contents of a CSV Tag File 3-54
3-10 List of Function Blocks 3-56

3-1 HMI Function

The HMI function constantly allocates ITEM data (20 words per Block) for the Control/Operation Block, External Controller Block, and System Common Block. The ITEM data is allocated in the specified EM bank in the CPU Unit in the order of the function block addresses.
The EM bank number where the ITEM data is allocated (known as the HMI data area) is determined by ITEM050 of the System Common Block (block model 000.) The setting range for the HMI EM bank number is 0 to 12.
The refresh period for the HMI data is specified by ITEM051 of the System Common Block (block model 000). The ITEM051 is known as the "HMI function's operation cycle" and is set in seconds.

NOTE:

- Reception from the CPU Unit's EM area can be stopped with ITEM056 of the System Common Block (block model 000). This ITEM is called the "reception stop switch." Transmission to the CPU Unit's EM area can be stopped with ITEM057 of the System Common Block (block model 000). This ITEM is called the "transmission stop switch."
- ITEM059 of the System Common Block (block model 000) is the "HMI function disable switch." Set this ITEM to 1 (Not used) in advance when the HMI function is not being used.

Relevant ITEMs in the System Common Block (block model 000)

ITEM type	ITEM	Data contents	Data range	Default
Parameter	050	HMI EM bank number	0 to C (Hexadecimal)	0
	051	HMI function's operation cycle (s) 1 (0.1 s), 2 (0.2 s), 3 (0.5 s), 4 (1 s), or 5 (2 s) Note: Always stop operation before changing this ITEM.	1 to 5	4 (1 s)
Input	056	Reception stop switch 0: Normal; 1: Stop reception	0 or 1	0
	057	Transmission stop switch 0: Normal; 1: Stop transmission	0 or 1	0
Parameter	059	HMI function disable switch 0: Used; 1: Not used	0 or 1	0

NOTE: CJ1G-CPU42P/43P/44P has only one bank of EM Area. When 0 is set to ITEM059 HMI function disabled switch (HIM function is enabled), EM Area can not be utilized by CPU Unit ladder program because EM Area is utilized for HMI function. To utilize EM Area in the CPU Unit ladder program, set "1" (Disabled) to the ITEM059 HMI function disabled switch.

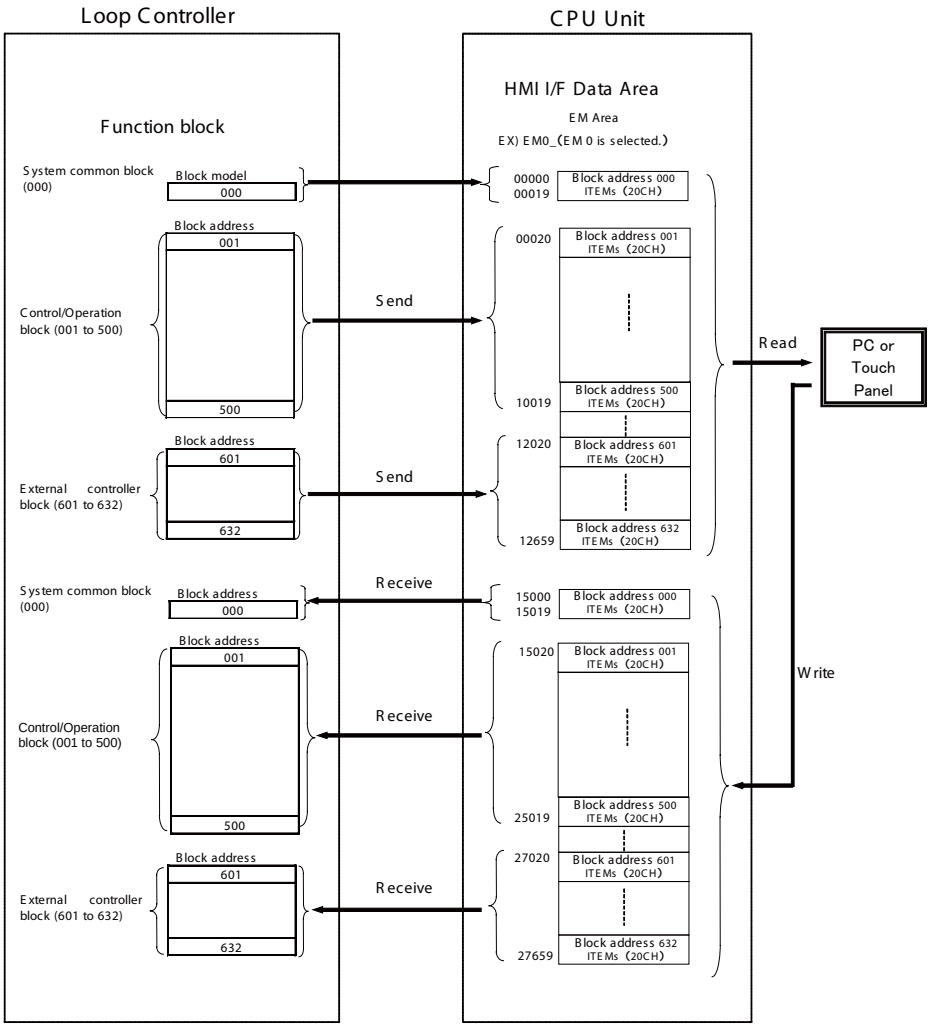

The function blocks ITEM data (20 words/Block) is allocated from address 00000 in the specified EM bank in order (starting with the Control/Operation Block and ending with the External Control Block).
Data is exchanged with the CPU Unit continuously while the Loop Controller is operating. The refresh period is set with ITEM051 of the System Common Block (block model 000.) ITEM051 is called the "HMI function's operation cycle" and can be set between 0.1 and 2 s.

The bank number (0 to 14) of the EM bank allocated to the HMI data area isÅ@set with ITEM050 of the System Common Block (block model 000.)

♦System Common Block
EM area words 00000 to 00019 are allocated to send data.EM area words 15000 to 15019 are allocated to receive data.

♦Control/Operation Block: block addresses 001 to 500
EM area words 00020 to 10019 are allocated to send data.EM area words 15020 to 25019 are allocated to receive data.

♦External Control Block: block addresses 601 to 632
EM area words 12020 to 12659 are allocated to send data.EM area words 27020 to 27659 are allocated to receive data.

NOTE:

- Even if there are unused block addresses, the blocks and addresses are not shifted. The block addresses always retain the same structure.
- A total of 20 words are ated to each function block as shown below. The first 18 words (through the +17 words) are allocated to analog data. The words +18 and +19 from the beginning words are allocated as bit data.

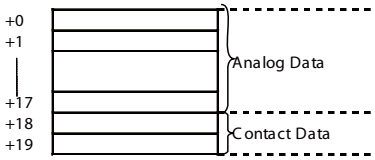

The ITEMs received for each function block model are predetermined as Receive Block ITEMs.

EX. Basic PID (Block model 011)

CH		
+0	ITEM007(PV)	Analog data
+1	ITEM029(SP)	
+2	ITEM089(MV)	
+3	ITEM008(HH_SP)	
≀	≀	
+9	ITEM054(P)	
+10	ITEM055(I)	
+11	ITEM056(D)	
≀	≀	
+17	ITEM099(OP_MK)	
+18		Contact data
+19		

	Bit	
+18CH	00	ITEM026(R/L_SW)
	01	ITEM086(A/M_SW)
	02	ITEM017(ALM_OFF)
	03	ITEM024(CAS_SET)
	14	ITEM035(AT)
	15	ITEM000(MT_ST)
+19CH	00	ITEM013(HH)
	01	ITEM014(H)
	08	ITEM079(MLA)

WARNING

Do not allow the bank of the EM Area with the number specified for allocation to the HMI data to overlap with any other area used by the CPU Unit or other Units.

- The block allocated for the HMI is specified in ITEM 050 (EM Area Bank Allocated for HMI Memory = 0 to C) of the System Common block (Block Model 000). If areas overlap, the system may operate in an unexpected manner, which may result in injury.
- Always stop the operation of the Loop Controller before converting any of the EM Area to file memory. If any part of the EM Area that is being used by the Loop Controller for the HMI is converted to file memory during Loop Controller operation, the system may operate in an unexpected manner, which may result in injury.
- Do not operate Loop-control CPU in battery-free operation when HMI Function is utilized.
- In case that CPU Unit is operated in battery-free operation, values in EM Area when power is turned ON may become incorrect and HMI Function data can be invalid.

information

Data values that are 8 digits long (such as accumulated values) are divided into two 4-digit ITEMs. Consequently, 8-digit values are divided into two words when they are stored in the EM area. (For example, the accumulated value of the batch flowrate capture is stored in words n+10 and n+11, with the rightmost 4 digits in n+10 and the leftmost 4 digits in n+11.) When reading and writing 8-digit values, observe the following precautions and perform any required processing in the HMI software to verify that the 8-digit data is correct.

♦Writing Data from HMI software to the EM Area's Reception Area (CPU Unit to Loop Controller)

When ITEM data has been changed by internal Loop Controller processing or changed directly by the CX-Process Tool or FINS command (not through the EM area), the Loop Controller will write the new data in the EM area's reception area.

If the same ITEM is overwritten from the HMI software, the write processes may conflict. It is possible that the two adjacent 4-digit exchanging data using HMI software and Other Software Section. 3 to 4 ITEMs making up an 8-digit value (such as an accumulated value) will not be consistent. (For example, it is possible that the ITEM containing the leftmost 4 digits will contain data written from HMI software and the ITEM containing the rightmost 4 digits will contain data written from the Loop Controller.)

To prevent 8-digit values, such as accumulated values, from being corrupted when writing from the HMI software, read the ITEM data from the 2 ITEMs immediately after they have been written and verify that they contain the correct data. In the unlikely event that the 2 ITEMs do not contain the correct data, write the data again.

♦Reading the EM Area's Send Area Data from HMI Software(Loop Controller to CPU Unit)

When an 8-digit value (such as an accumulated value) is being read from the HMI Software and being overwritten simultaneously from the Loop Controller, it is possible that only one of the two ITEMs will contain the new value. In this case, the data cannot be read properly.

To be sure that both ITEMs contain the correct data, read the 8-digit value (such as an accumulated value) two times, compare the two 8- digit values, and proceed only when the two values are equal.

NOTE: Perform the same processing described above to verify the accuracy of 8-digit values in the HMI area when reading or writing the values from the CPU Unit instead of the HMI software.

3-2 Connections via Ethernet

This section describes the procedure to connect CX-Programmer/CX-Process Tool to the PLC via Ethernet.

Setting Procedure

This section describes the procedure to connect CX-Programmer/CX-Process Tool to the PLC via Ethernet with default IP address of Ethernet Unit.
When Ethernet Unit is mounted on the PLC and I/O Table is created (Unit settings are not registered and IP Address Display/Setting Area in the DM Area allocated for the CPU Bus Unit is set to 0.), the Ethernet Unit operates with the default IP address.
Default IP Address is determined as follows:
Default IP Address = 192.168.250.FINS Node Address
FINS Node Address is determined by the rotary switch on the front panel of the Ethernet Unit.
When the IP Address and Unit settings are default settings, the Unit operates with the following settings.

Settings	Operation
IP Address	192.168.250.FINS Node Address
Subnet Mask	255.255.255.0 (Class C Mask condition)
Broadcast	4.3BSD
Transmission rate	Automatic detection
TCP/IP	keep-alive 120min
IP Router Table	None (IP Routing Disabled)

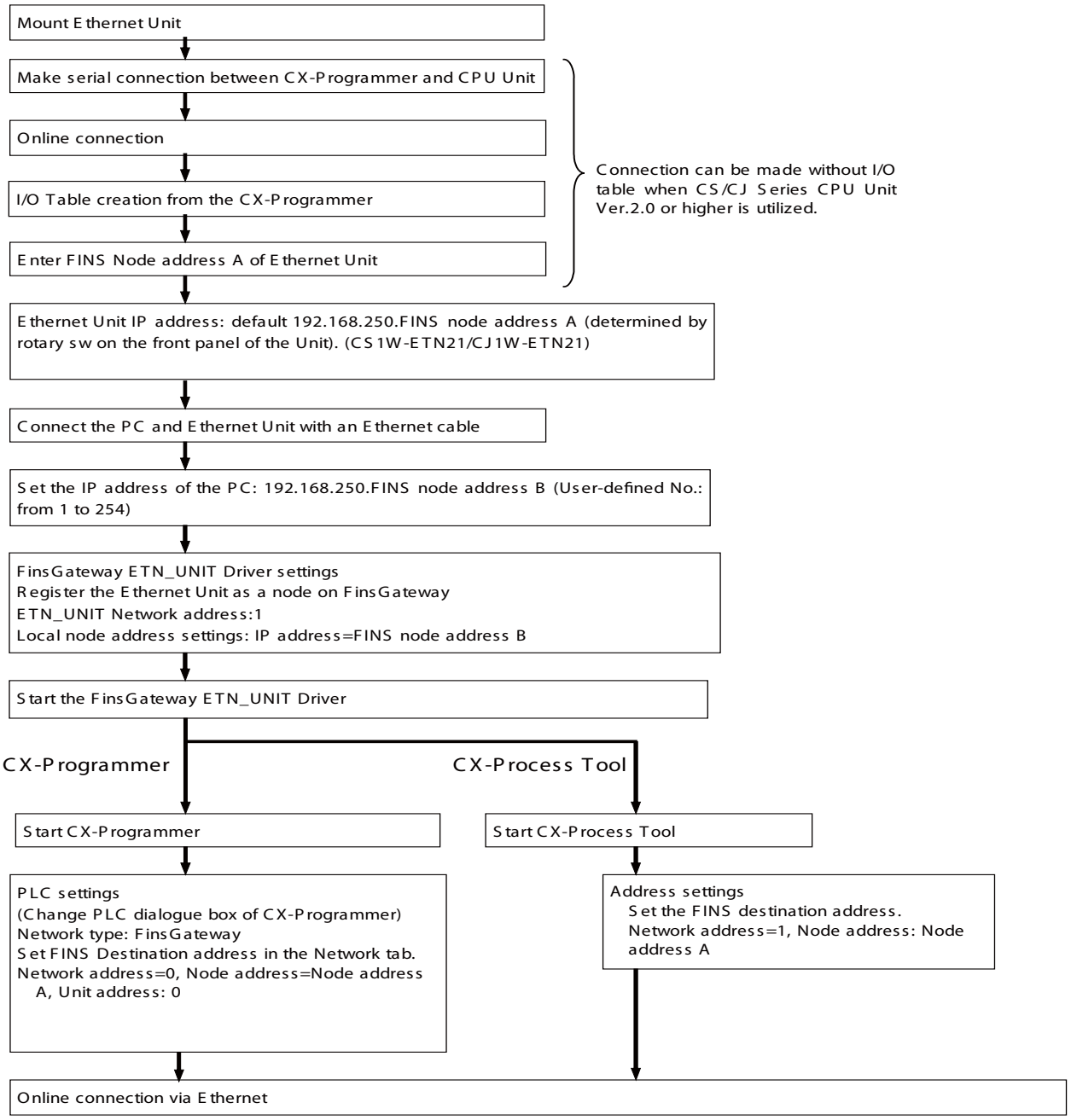
Mount Ethernet Unit
Make serial connection between CX-Programmer and CPU Unit
Online connection
I/O Table creation from the CX-Programmer
Enter FINS Node address A of Ethernet Unit
Connection can be made without I/O table when CS/CJ Series CPU Unit Ver.2.0 or higher is utilized.
Ethernet Unit IP address: default 192.168.250.FINS node address A (determined by rotary sw on the front panel of the Unit). (CS1W-ETN21/CJ1W-ETN21)
Connect the PC and Ethernet Unit with an Ethernet cable
Set the IP address of the PC: 192.168.250.FINS node address B (User-defined No.: from 1 to 254)
FinsGateway ETN_UNIT Driver settings
Register the Ethernet Unit as a node on FinsGateway
ETN_UNIT Network address:1
Local node address settings: IP address=FINS node address B
Start the FinsGateway ETN_UNIT Driver
CX-Programmer
CX-Process Tool
Start CX-Programmer
Start CX-Process Tool
PLC settings
(Change PLC dialogue box of CX-Programmer)
Network type: FinsGateway
Set FINS Destination address in the Network tab.
Network address=0, Node address=Node address A, Unit address: 0
Address settings
Set the FINS destination address.
Network address=1, Node address: Node address A
Online connection via Ethernet

System Configuration (Example)

The following settings are required in order to connect CX-Programmer/CX-Process Tool to the CS/CJ series PLC with the default setting online via FinsGateway. In this sample system, Ethernet Unit (Ethernet Unit CJ1W-ETN21) is mounted on the PLC and FinsGateway Version 2003 is installed in the PC.

NOTE: Refer to ***Ethernet Unit Operation Manual (Cat No. W343)*** for user-defined setting, including IP Address settings to other than the default setting.

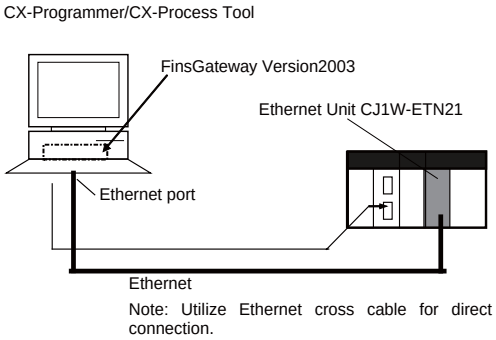

Setting Example

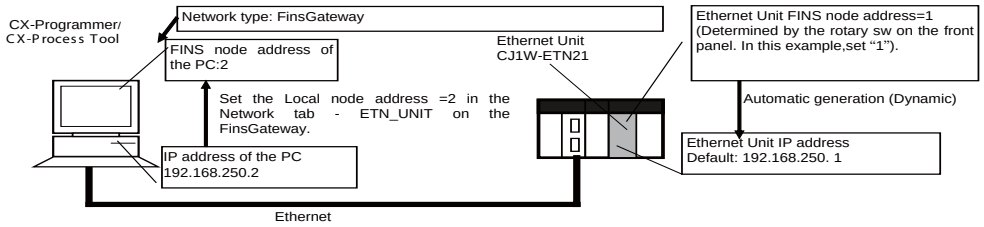

Settings	PC	Ethernet Unit
FINS Node Address	2 (Manual setting by Fins Gateway)	1 (Set by the rotary switch)
Direction	(Setting on Windows is valid).	(Setting by rotary switch is valid).
IP Address	192.168.250.2 (Manual setting on Windows)	192.168.250.1 (In case that Node Address is 1 in default setting)
FINS Unit No.	User-defined No. (16 to 31) Automatically set. (No need to set this No).	-

Connect the PC and PLC online following the orocedure below.

1. Installing the FinsGateway (PC)

Install the Fins Gateway.
Fins Gateway is bundled in the CX-Programmer/CX-Process Tool.

2. Setting the Ethernet Unit FINS Node Address (PLC)

Set the rotary switch on the front panel to "01".

3. Default Ethernet Unit IP Address Setting

IP Address of the Ethernet Unit CJ1W-ETN21 is "192.168.250.FINS Node Address.
The FINS Node Address is determined by the FINS Node Address setting by the rotary switch on the front palel of the Unit. When the rotary switch on the front panel = FINS Node Address 01, IP Address of the Ethernet Unit = 192.168.250. 1.

4. Connecting Ethernet Port of the PC and Ethernet Unit with a cable. (Cable type differs depending on the connecting method: via a hub, or direct connection).

In this exaple, one PC is connected with one PLC: An Ethernet cross cable is utilized. A hub is not installed. (When the PC is connected to a PLC via a hub, prepare two straight cables for connection).

5. Setting PC's IP Address

(1)In the ***Nerwork Connections*** of Windows, select ***Local Area Connections*** and right-click on it. Then select ***Properties*** in the pop-up menu.
(2)Select ***Internet Protocol (TCP/IP) - Properties***.
(3)Check the check box for ***Use the following IP address*** and enter IP address.This manual IP address setting enables the PC and Ethernet Unit to be located on the same subnet. Therefore, set the IP address and subnet mask of the PC as follows:
IP address = 192.168.250.2
Subnet mask= 255.255.255.0

For the least significant digit number (Host ID) of the IP address, set a user-defined number (1 to 254) which is not same as the FINS node address specified by the rotary switch on the front panel of the Etherner Unit. (In this example, do not set "1").

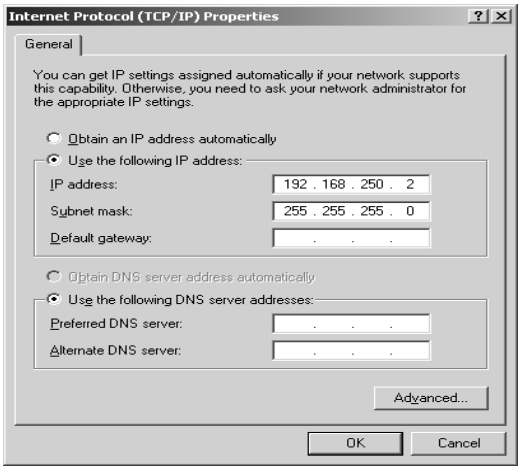

NOTE:

IP Address Setting for the PC

Both PC and Ethernet Unit can be placed on the same subnet when the IP Address of the PC is manually set.

In the default condition, settings for the IP router is not registered; therefore, communication can be built on only the same subnet. Therefore, it is necessary to place PC and Ethernet Unit on the same subnet.

6. Fins Gate Way Settings

Select ***FinsGateway - FinsGateway Configuration.***

7. Starting ETN_UNIT Service of FinsGateway

In the ***OMRON FinsGateway Settings*** Screen, select ***ETN_UNIT*** which is located under ***Services*** in the **Basic** tab and click ***Start***.

8. Setting ETN_UNIT Driver

◆Settings for Network and Unit

(1)In the ***Basic*** tab of the ***OMRON FinsGateway Settings Screen***, select ***Network and Unit Settings***. Then, select ***Local Network (Ethernet)***and click the ***Properties*** button.

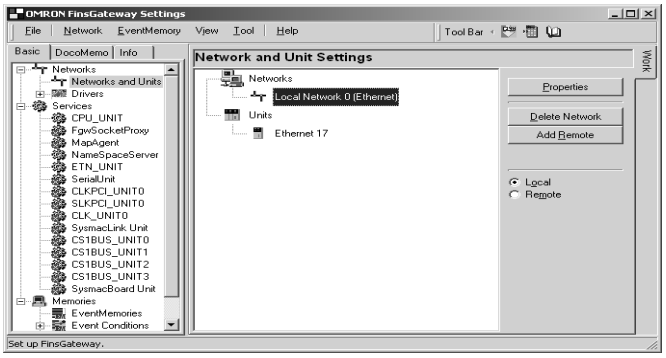

(2)In the ***Network*** tab, enter the following:

Settings	Description	Set Value
Network Address	Enter the Network Address. In this example, set "0" (Default setting). Set 1 or larger number normally.	0
Local Node Address	Set "1" in this example.	1
Communication Unit Address	Enter the PC Unit Address in decimal number (16 to 31).	User-defined No. (16 to 31) No need to enter.

◆Setting the Driver

(1) In the ***Basic*** tab of the ***OMRON FinsGateway Settings*** Screen, select ***ETN_UNIT*** which is located under ***Drivers***. Then click the ***Properties*** button.

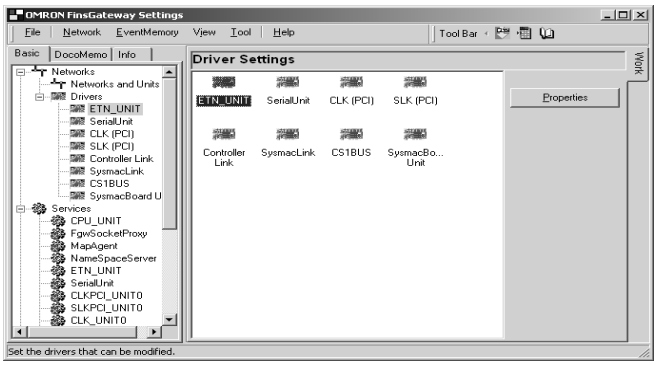

(2)In the ***Communication Unit*** tab, set the ***FINS-IP Conversion*** to ***Automatic generation***. Check the check box for ***Make own node address from IP address.***

9. Connections on CX-Programmer and CX-Process Tool

◆CX-Programmer: Registering Target PLC

(1)In the ***Change PLC*** dialogue box, take the following steps.

a) Enter ***Device Name***. (Example: PLC0)

b) Select ***FinsGateway*** for the ***Network type***.
c) Click the ***Settings*** button for the network settings.
(2)In the ***Network*** tab of the ***Network Settings -Ethernet*** dialogue box, enter the followings:

- In the ***FINS Destination Address***, enter the FINS Network Address of the CPU Unit (Network Address= default 0, Node Address=1, and Unit=0).

NOTE: In this example, Network address is set to "0"(default). However, enter 1 or larger number for the address, generally. Refer to ***Ethernet Unit Operation Manual (Cat. No. W343)*** for detailed information.

- ***Frame Length***: 2000 (byte)
- ***Response Timeout***: 2 sec

(3)Select ***PLC - Work Online.***
NOTE: For CS/CJ Series Unit Ver.2.0 or higher, if network settings above are completed, connection between a PLC on the network and CX-Programmer/CX-Process Tool (CX-Server is selected for connection) can be made even if I/O Table is not created.

◆CX-Process Tool: Selecting Communication Driver

(1)From the ***Start*** Menu, select ***Omron - CX-One -CX-Process Tool - CX-Process Tool*** to start the CX-Process Tool.
(2)The dialog box to select communication driver is displayed. Select ***FinsGateway***.

information

Communication Driver

To display the dialogue box below to select communication driver when starting the CX-Process Tool, select ***File - Show Driver Select Dialog -Show***.

In case that CX-Process Tool is installed from the CX-One, this dialog box will not displayed with default settings and CX-Server is automatically selected as communication driver. To change the communication driver setting to FinsGateway, select ***File - Show Driver Select Dialog -Show on the CX-Process Tool.***

(3)In the Project Work Space, select active node and click ***Settings - Network Settings***.
(4)Enter the FINS Network address of the Loop Controller for the Network Address. (Network Address= default 0, Node Address=1, and Unit=Loop Controller Unit No. + 15HEX).
NOTE: In this example, Network address is set to "0"(default). However, enter 1 or larger number for the address, generally. Refer to ***Ethernet Unit Operation Manual(Cat. No. W343).***
(5)Click on the ***Execute - Operation - Monitor for Run Status*** to confirm if connection can be made.

3-3 Monitoring by CX-Process Monitor Plus

Screens of CX-Process Monitor Plus can be utilized for setting and monitoring the Loop Controller.

	Screen	Monitoring operating status	Controlling operation	Monitoring alarm status
User-defined screens	Overview	---	---	OK
	Control	OK(Display PV bar)	OK(Change SP, switch between auto/manual, and perform manual operations)	OK
	Tuning	OK (Display PV, SP, and MV trends for 1 loop)	OK(Change SP, and change P, I, D, etc.)	OK(Change bar graph colors)
	Trend	OK((Display Control Block or analog signal trends)	---	OK
	Batch Trend	OK (Display Control Block or analog signal trends)	---	---
	Segment Program 2	OK (Display Segment Program 2 trends)	OK (Run/stop operation at the relevant Segment Program 2 Block)	OK (Errors related to the relevant Segment Program 2 Block)
	Graphic	OK(Display status for contact or analog signal graphics)	OK(Turn ON/OFF the contact, and set the analog value)	OK
	Annunciator	---	---	OK(Use colors or sound to notify of an alarm)
	Operation Guide Message	OK Guide Message (Display message when Internal Switch is turned ON)	---	OK
	System Monitor	OK (Display the run/stop status for the Loop Controller, display Execution errors, RAM checksum errors,and battery errors, and monitor the status of the CPU Unit control mode, etc.)	OK(Run/stop command for the Loop Control Unit/ Board)	OK
System Screens	Alarm Log	---	---	OK(Stored when an alarm occurs)
	Operation Log	---	OK (Stores run operation history, e.g., SP change, etc.)	OK
	System Monitor Log	OK (Displays run/stop command history and Execution error history when an error occurs)	---	OK

CX-Process Monitor Plus is a software to monitor PLC-based Process Control system. Screens on the CX-Monitor Plus can be generated from the tag data (tag file for Monitor Plus).
The following six steps must be performed on the CX-Process Tool to pass tag data to the CX-Process Monitor Plus.

(1)Set the network address, node address, and unit address
(2)Register and connect the function blocks that exchange data with the CX-Process Monitor Plus.
(3)Set the CSV tags and the tags for Monitor Plus.
(4)Generate the tag file for Monitor Plus
(5)Download the function block data to the Loop Controller

(6)Compile the monitor tags.
After completing the setting above on the CX-Process Tool, create screens for CX-Process Monitor Plus.

Preparation on CX-Process Tool

1. Set the network address, node address, and unit address

Complete communication settings for CX-Monitor Plus on CX-Process Tool.
To connect CX-Process Monitor Plus and PLC, it is necessary to set network address, node address, and nit No. Select ***Settings - Network Settings***, or ***Setting - Change PLC*** on the CX-Process Tool.

information

Monitoring software and CX-Process Monitor Plus utilize FinsGateway as communication driver to communicate with PLC. Select ***Fins Gateway*** for communication driver when monitoring software or CX-Monitor Plus is utilized. When ***CX-Server*** is selected, it is impossible to connect online CX-Monitor Plus with PLC.

2. Register and connect the function blocks that exchange data with the CX-Process Monitor Plus.

Register Function blocks to exchange data with CX-Monitor Plus.

Item	Loop Control Unit	Loop Control Board
Function block data to exchange	Send All Blocks block (Block Model 462) and Receive All Blocks block (Block Model 461)	HMI settings in the System Common block (Block Mode 000)
Contact signals to exchange	Contact Distributor (Block Model 201) or Internal Switch (Block Model 209)	
Analog signals to exchange	Input Selector block (Block Model 162) and Constant Generator block (Block Model 166)	

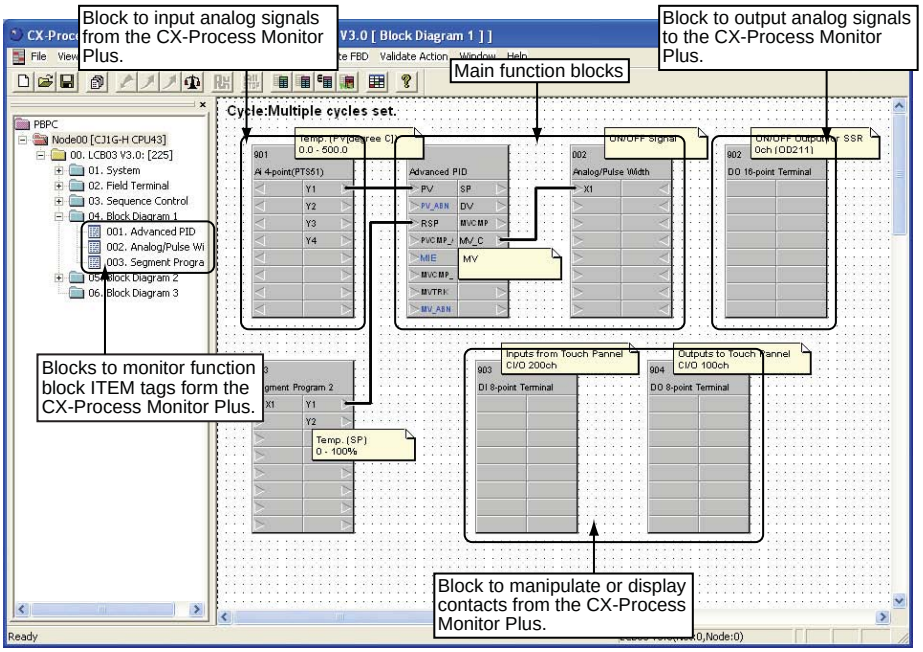

3. Set the CSV tags and the tags for Monitor Plus

Always set the CSV tags and tags for the CX-Process Monitor Plus. The CX-Process Monitor Plus recognizes CSV tags and tags for the CX-Process Monitor Plus using tag names.

Example: Internal Switch Block (Block Model 209).

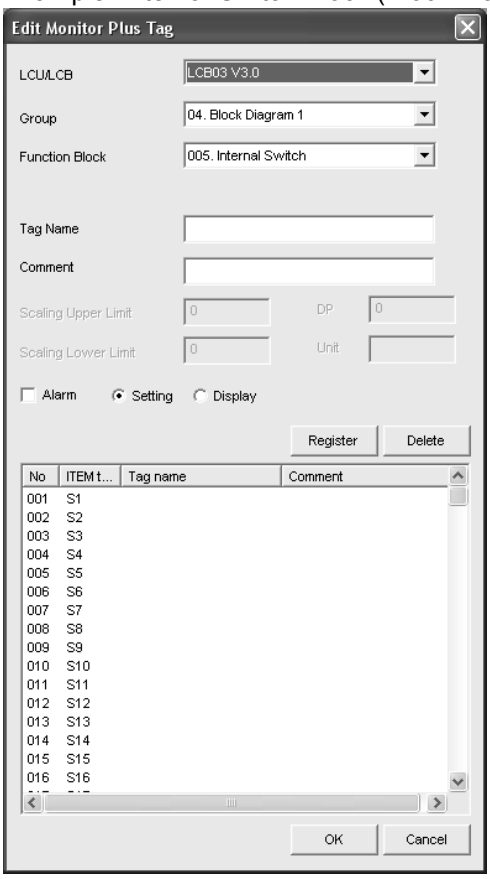

Item	No. of character	Prohibited characters
Tag names	16 max.	None
Tag comments	16 max.	None

NOTE:

It is not necessary to specially register function block to monitor User Link Table. Set a Monitor Plus tag in the User Link Table as shown below.

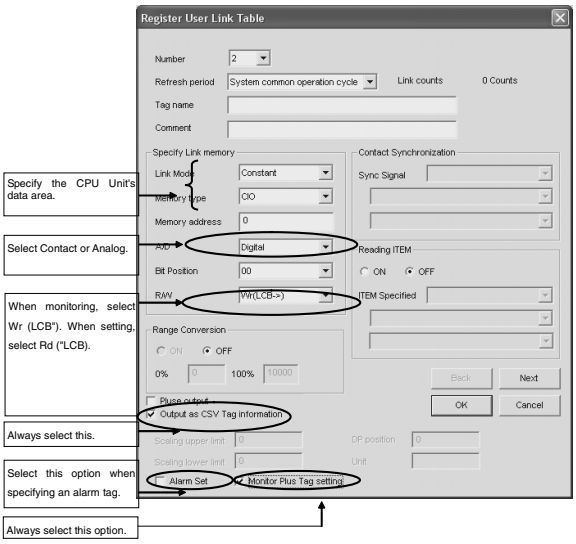

4. Generate the tag file for Monitor Plus

Generate the tag file for Monitor Plus using the following procedure.

(1)Select ***Execute - Output Tag File - Monitor Plus Tag***. The following window will be displayed. To execute an error check, select the option to perform an error check.

(2)Click the ***OK*** Button. Compilation of CSV tags and tags for Monitor Plus will begin. The following message will be displayed if compilation ends normally.

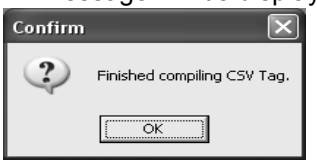

5. Download the function block data to the Loop Controller

Download the function blocks.

6. Compile the monitor tags.

Complile the generated tag file for CX-Process Monitor Plus. A monitor tag file will be generated. The monitor tag file will be automatically created in the following folder.
Directory: C:\Program Files\Omron\CX-Process Monitor Plus\db (Underline: Installed directry)
File names: "mtagmst" and "mtagsubmst"

(1)Start the CX-Process Monitor Plus by selecting ***Start - Program - Omron - CX-Process Monitor Plus - CX-Process Monitor Plus.*** The CX-Process Monitor Plus's Main Window will be displayed.

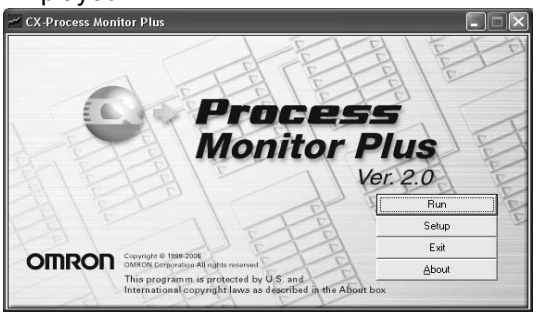

NOTE: When you have finished using CX-Process Monitor Plus, click the ***Exit*** Button in the Main Window. The Main Window and CX-Process Monitor Plus will both close.
(2)Click the ***Start*** Button.

◆Creating Screens for Monitoring

Generate screens below for monitoring in the Builder Window.

- Overview Screen
- Control Screen
- Trend Screen
- Batch Trend Screen
- Segment Program 2 Screen
- Graphic Screen (Generate Graphic Screens in advance. Refer to ***5-4 Creating Graphic Screens*** of ***CX-Process Monitor Operation Manual (Cat. No. W428).***
- Annunciator Screen
- Alarm Log Screen
- Operation Guide Screen

7. Starting the CRT Builder

(1)In the Setup Dialog Box, click the ***CRT Builder*** Button.

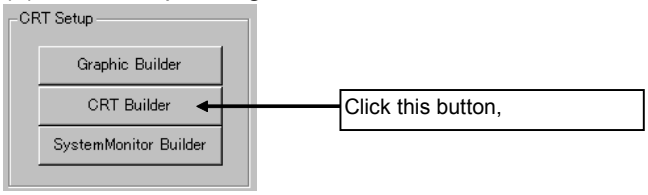

The CRT Builder Window will be displayed.

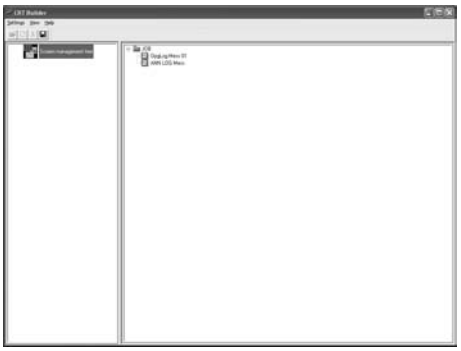

8. Registering the Overview Screen

This section describes the procedure to register Overview Screen and settings and registration of screens below which are included in the Overview Screen.

- Control Screen
- Trend Screen
- Graphic Screen (Generate Graphic Screens in advance. Refer to ***5-4 Creating Graphic Screens*** of ***CX-Process Monitor Plus Operation Manual (Cat. No. W428)***.
- Annunciator Screen

NOTE: Tuning Screen is automatically generated depending on tag settings.

(1)Start CRT Builder, and then in the CRT Builder's Screen Management Tree, select ***JOB - Setting - Create Overview Screen***. The CRT Builder Dialog Box will be displayed.

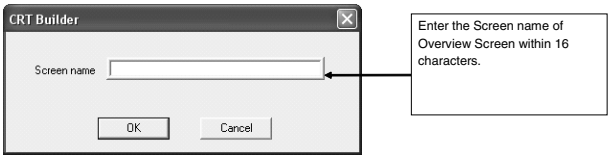

(2)Enter a screen name, and then click the ***OK*** Button. The Overview Screen will be registered,

and the name of the screen you entered will be displayed in the Screen Management Tree.

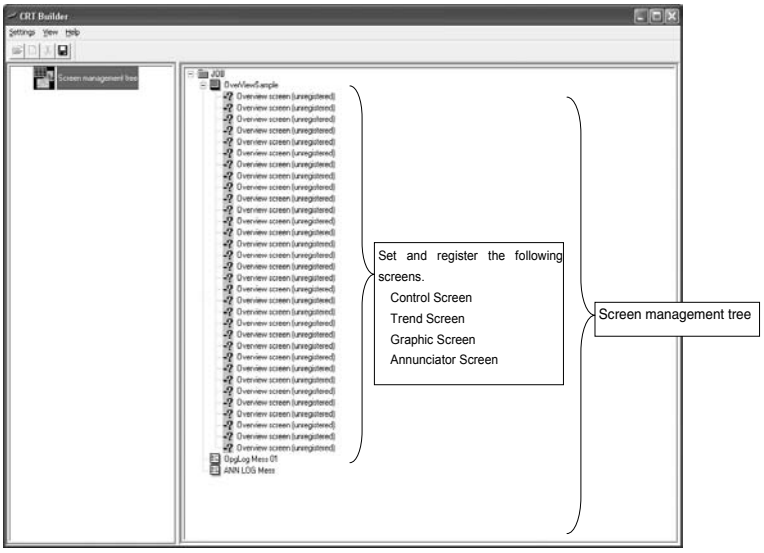

(3)Select the screen item, and then select ***Set - Register Screen*** (or double-click the screen item), to set and register the screens. Settings differ for each screen item. Refer to later in this manual for how to set each screen.

9. Registering Control Screens

(1) Select ***Screen*** in the Overview Screen sub-elements using Screen Management Tree in CRT Builder.

(2)From the ***Settings*** menu, select ***Register Screen***, or double-click Screen.The ***CRT Builder*** dialog box will be displayed.

(3) Select ***Control Screen***, and then click the ***New*** Button.The following dialog box will be displayed. You can register up to eight function blocks in the Control Screen. Specify the function

blocks using tag names.

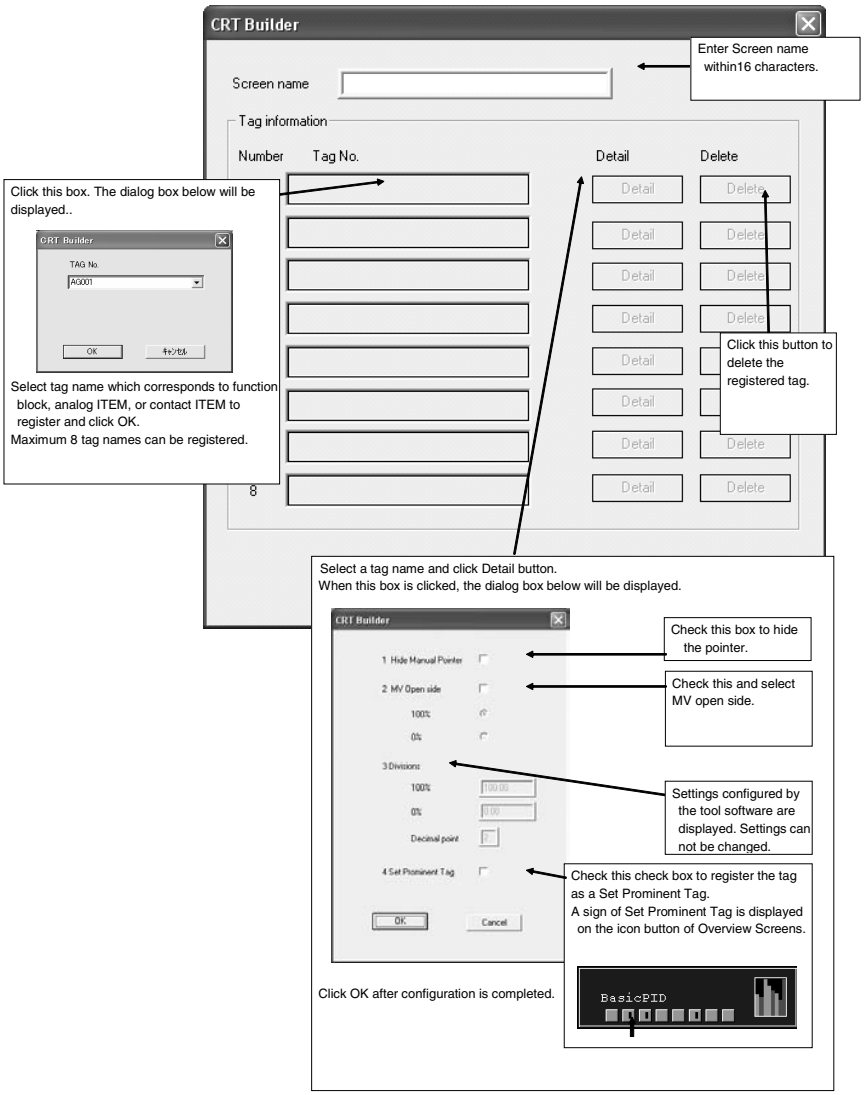

(4)Enter the ***Screen Name***, set the ***Tag No.*** and ***Detailed Settings***, then click the ***OK*** Button.The Control Screen will be registered. The Screen Name you have entered will be displayed on the Screen Management Tree.

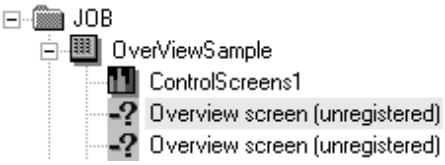

10. Registering Trend Screens

You can register up to 60 Realtime Trend Screens, and up to 120 Historical Trend Screens.

(1)Select the Overview Screen's sub-element Screen in the CRT Builder's Screen Management Tree.

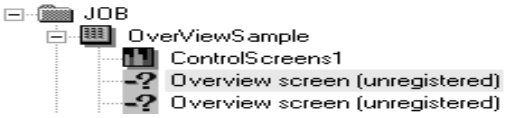

(2)In the ***Settings*** Menu, select ***Register Screen***, or double-click ***Screen***. The dialog box shown in Step 2 of the preceding section, Control Screen Registration, will be displayed.

(3)Select the ***Trend Screen***, and then click the ***New*** Button.The following dialog box will appear.You can register a maximum to eight analog ITEMs (PV, SP, MV, or other analog signals), or eight contact ITEMs in the Trend Screen. Specify analog ITEMs or contact ITEMs using either a) or b) below.

a) Tag name and relevant Tag ITEM (either PV, SP, or MV) corresponding to the function block.

b) The tag name corresponding to the analog ITEM or contact ITEM.

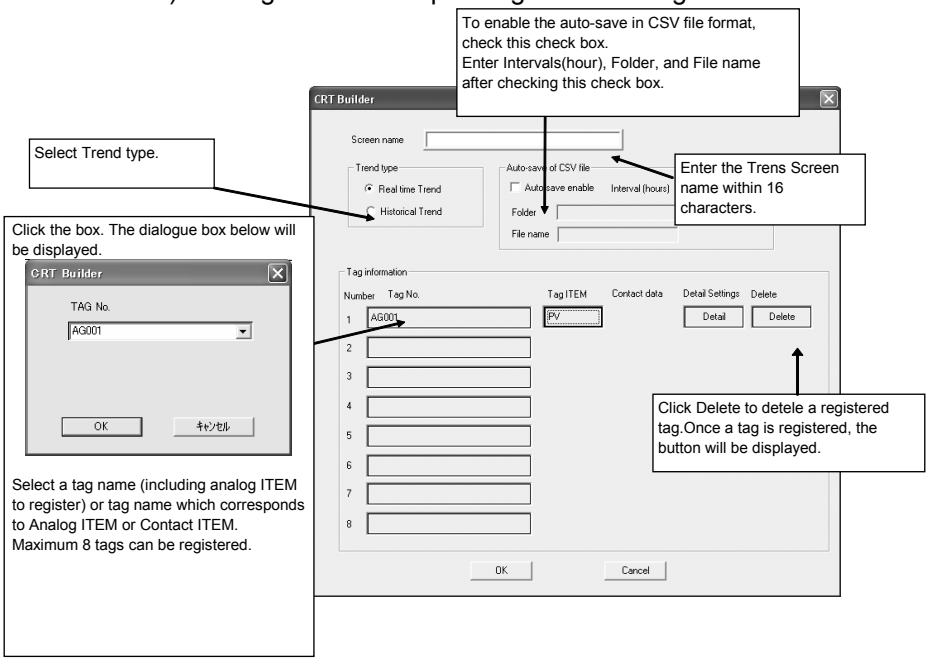

(4)Enter the ***Screen Name,*** set the ***Trend Type***, and then select ***Tag No.*** When you register the

tag name, the dialog box will change as follows:

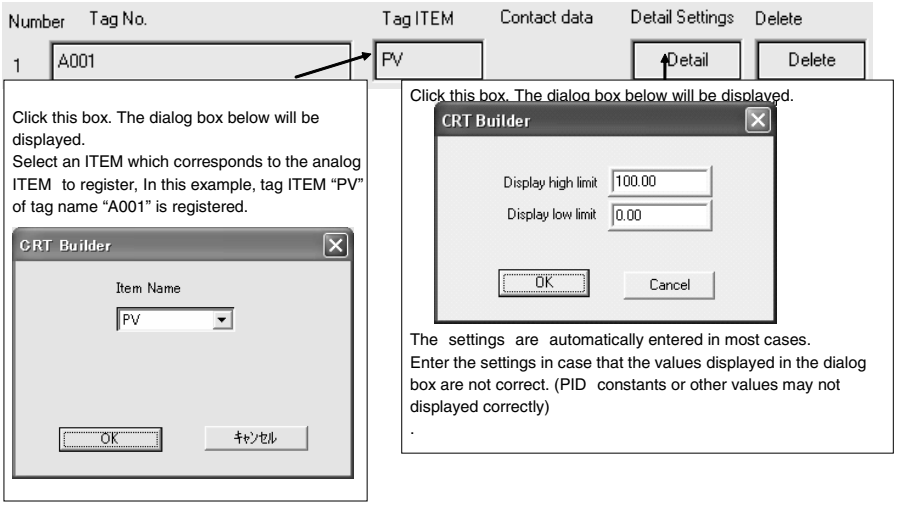

(5)Set ***Configure Tag No.*** (Tag ITEM), and ***Detailed Settings***, and then click the ***OK*** Button.The Trend Screen will be registered, and the name of the screen you entered will be displayed in the Screen Management Tree.

information

Batch Trend Screens

In addition to the Real Time Trend Screens and Historical Trend Screens, Batch Trens Screens are newly added in the CX-Process Monitor Plus Ver2.0 or higher version. In the Batch Trend Screens, trend data collection can be started and stopped using tag data status as the trigger.
Past batch data in the batch trend file can be superimposed for display on the Batch Trend Screen during data collection, and can be output to a CSV file.

11. Registering Segment Program 2 Screens

There are two types of Segment Program 2 Screens: a Segment Program 2 Monitor Screen and a Segment Program 2 Edit Screen. Up to 16 pairs of Segment Program 2 Screens can be registered.

(1)Select ***Screen*** in the Overview Screen sub-elements using the Screen Management Tree in the Builder Window.

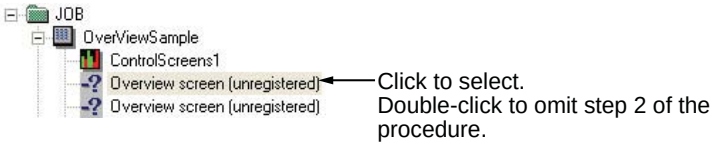

(2)Select ***Register Screen*** from the ***Settings*** Menu, or double-click ***Screen***. The dialog box displayed in step 2 of ***9. Registering Control Screens*** above will be displayed.

(3)Select ***Segment Program 2 Screen*** and then click the ***New*** Button. The following dialog box will be displayed. Aside from the Segment Program 2 tags, one analog ITEM (PV, SP, MV, or other analog signal) and one contact ITEM can be registered as an optional tag. Specify analog or contact ITEMs using either method of 1 or 2 below.

a) Tag numbers (tag names) and tag ITEMs (PV, SP, or MV) for the functionblock.

b) Tag numbers (tag names) for analog or contact ITEMs.

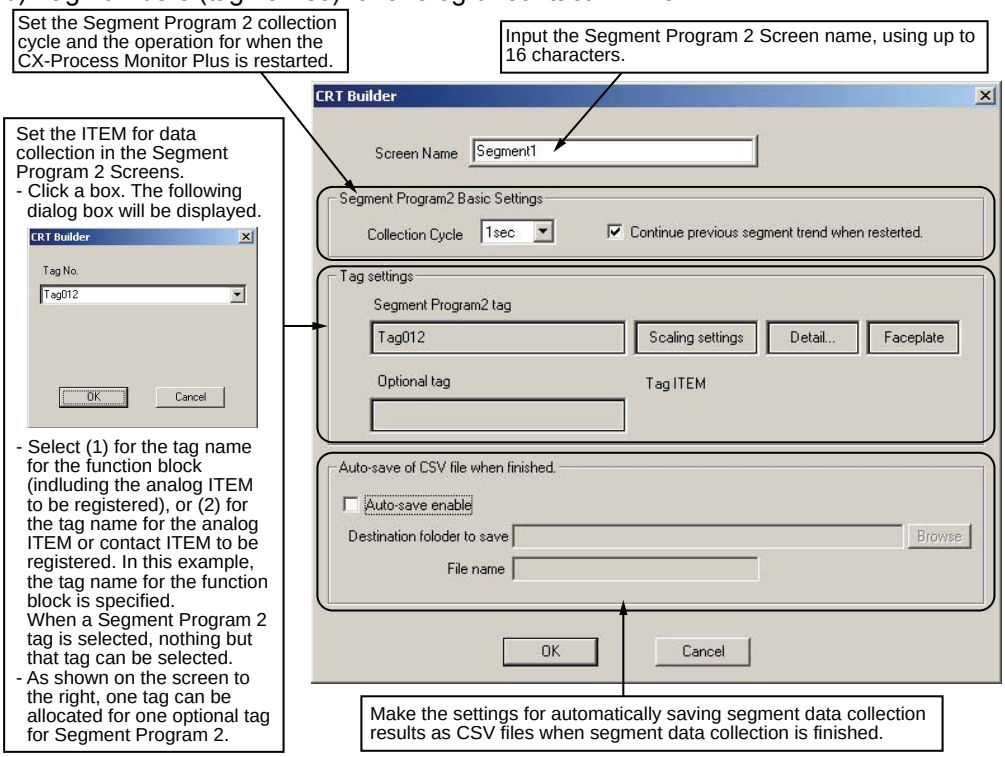

(4)Set the screen name.

(5)Set the Segment Program 2 Screen basic settings as shown below.

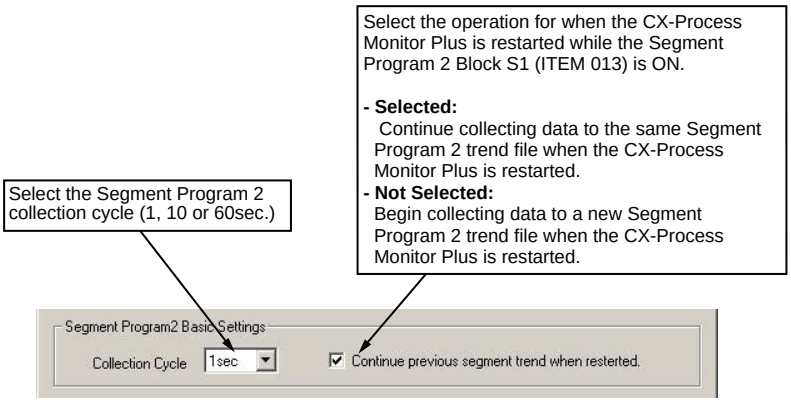

12. Registering Graphic Screens

You can register up to 200 Graphic Screens.

(1)Select ***Screen*** in the Overview Screen sub-elements using Screen Management Tree in CRT Builder.

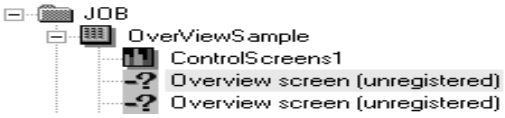

(2)From the ***Settings*** menu, select ***Register Screen***, or double-click ***Screen***.The dialog box shown in Step 2 of the proceeding ***9. Registering Control Screen*** will be displayed.

(3)Select ***Graphic Screen***, and then click the ***New*** Button. The following dialog box will be displayed.Select the Graphic Screen you created and saved using CRT Builder (i.e., the Graphic Builder Button).

NOTE: Before registering the Overview Screen, you must create and save the Graphic Screen using CRT Builder.

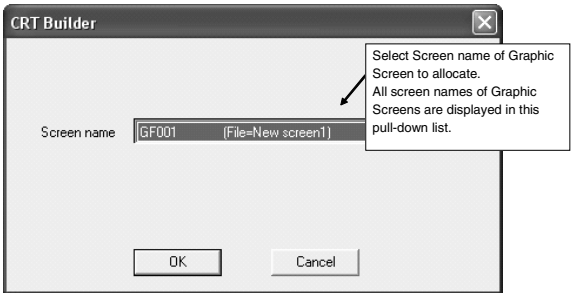

(4)Select the screen name, and then click the ***OK*** Button. The Overview Screen will be registered, and the name of the screen you entered will be displayed in the Screen Management Tree.

13. Registering Annunciator Screens

You can register up to five Annunciator Screens. The registration procedure is as follows:

(1) Select the Overview Screen's sub-element Screen in the CRT Builder's Screen Management Tree.

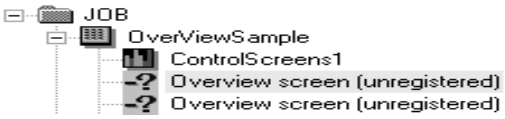

(2)In the ***Settings*** Menu, select ***Register Screen***, or double-click ***Screen***.The dialog box shown in Step 2 of the preceding section, ***9. Registering Control Screen***, will be displayed.

(3)Select the ***Annunciator Screen***, and then click the ***New*** Button.The following dialog box will appear. In an Annunciator Screen, maximum sixteen contatct ITEMs can be registered. Specify a

Tag No. (tag name) for the contact ITEM.

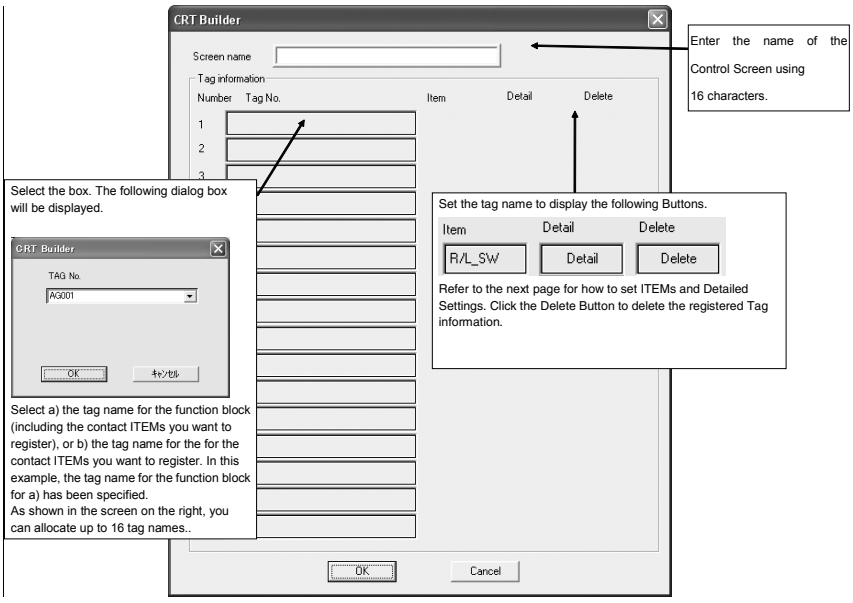

Setting ITEMs

Select the tag name, and then click the ***ITEM*** Button. The following dialog box will be displayed.

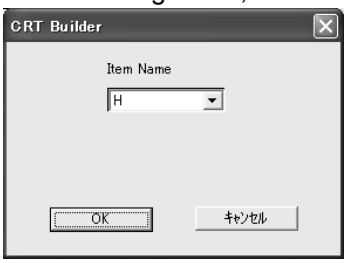

Select the Tag ITEM corresponding to the contact ITEM you want to set. In this example, Tag ITEM "***H***" for the Function Block for tag name ***"AG001"*** has been selected. Next, click the ***OK*** Button.

Detailed Settings

Select the tag name, and then click the ***Details*** Button. The following dialog box will be displayed.

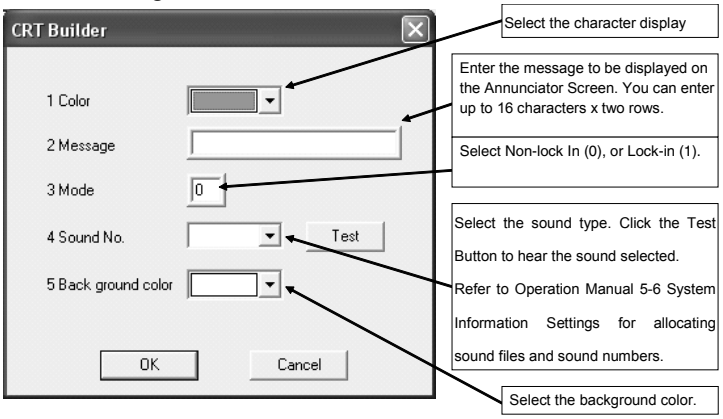

Complete the settings, and then click the ***OK*** Button.

(4)Make the above settings, and then click the ***OK*** Button. The Annunciator Screen will be registered, and the name of the screen you entered will be displayed in the Screen Management Tree.

14. Registering System Monitor

Using the System Monitor Setting Window, register the PLC and Loop Controller to be monitored using the System Monitor Screen. Also register the local computer to perform the monitoring.The setting items are as follows:

PLC Settings	PLC node number (address)	Use the System Monitor Screen for this setting.
	Unit address of the Loop Control Unit/Board (The unit address of the Loop Control Board is always 225.)	
Computer settings	Computer node number (default is 32)	
	Communications type (CLK, Serial, Ethernet) (Use the System Monitor Screen to set CLK or Ethernet communications.) For serial connections, you must also set the COM port and baud rate.	

For serial (Host Link) communications only, FinsGateway communications will start according to the communications conditions given below, when you start the Monitor Process (i.e., select ***Run*** in the Main window or Setup Dialog Box).

- Communications type: Serial (Host Link)
- COM port used and baud rate

NOTE: The PLC settings (node address, Unit address, etc.) set here can be used only from the System Monitor Screen. Actual communications processing depends on the network address, node address, and Unit address set using the CX-Process Tool. Controller Link and Ethernet settings within the computer settings made here can also be used only from the System Monitor Screen. Perform actual communications processing by manually starting FinsGateway.

information

Set the PLC settings (node address, Unit address, etc.) which is identical to the network address, node address, and Unit address settings made using CX-Process Tool. If the settings do not match, monitoring using the System Monitor Screen will not be performed correctly.

15. Saving Configurations.

When all screens have been configured, save their settings,using the following procedure.

(1)Select ***Settings*** - Save in the Builder Window.

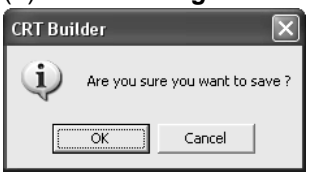

(2)Click the ***OK*** button.

Starting the Monitor Process

◆Overview Screens

The Overview Screen displays all the menu screens and displays alarms.

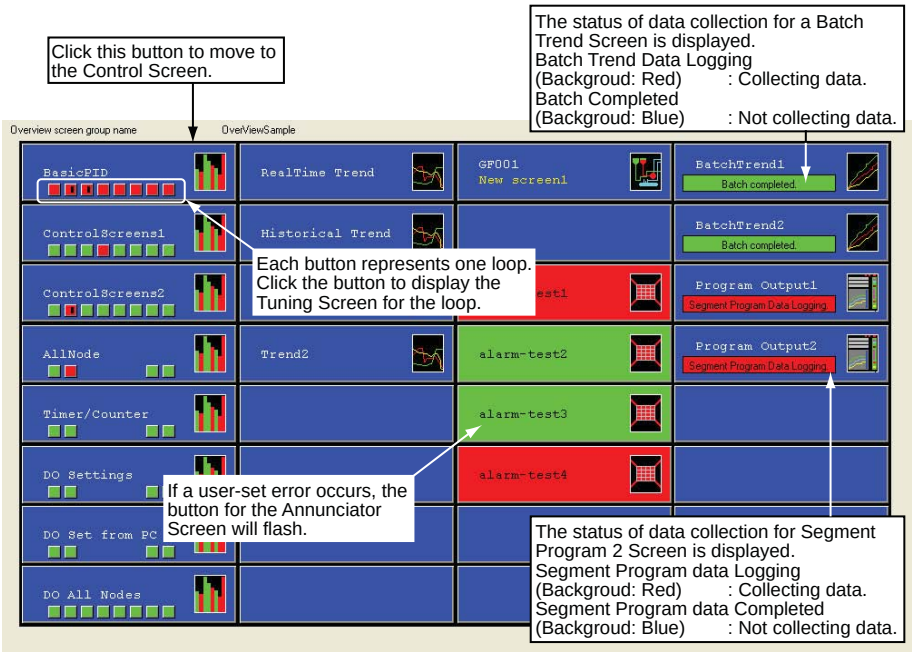

The button icons for the registered Control Screen, Trend Screen, Graphic Screen, and Annunciator Screen will be displayed.

Icon	Screen type	Icon	Screen type
	Control Screen		Segment Program 2 Screen
	Trend Screen		Graphic Screen
	Batch Trend Screen		Annunciator Screen

Select the icon to move to the registered screen.

If a user-set alarm occurs, the icon for the Annunciator Screen flashes.

When returning to the Overview Screen from any screen, first select ***Overview*** from among the screen selection buttons, and then select the Overview Screen name.

◆Control Screens

Use Control Screens to monitor and set the Control Block and part of the Operation Block, to monitor analog signals, and to monitor and set contact signals. For the Control Block in particular, use the Control screen to perform such operations as monitoring Set Point (SP), Process Variable (PV), Manipulated Variable (MV) run status, and Set Point (SP) changes, etc.
Click the Control Screen Button in the Overview screen to display the following information on the Control Screen.

Example: Basic Displays and Operations (Basic PID (011)

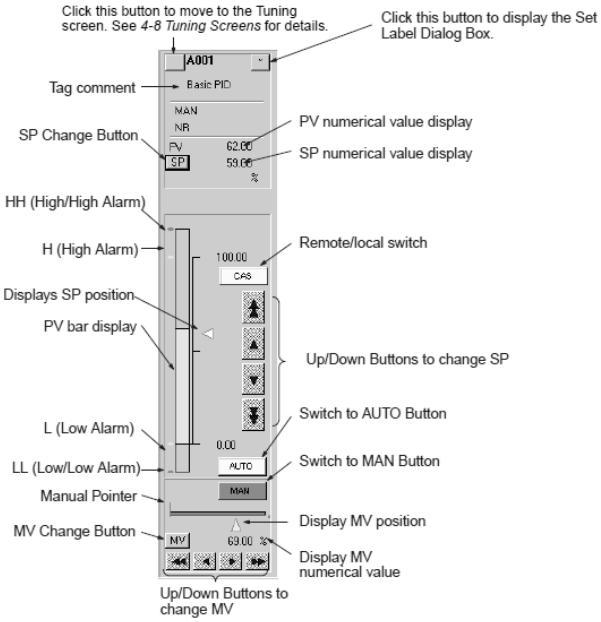

·PV Bar Display
Displays the PV range from upper to lower limit as a bar.
Green: Status normal
Red: PV Alarm (either HH, H, L, LL)
Yellow: Deviation Alarm
Blue: Alarm OFF
Light blue: Function block calculations stopped
·Changing SP
Change SP using the SP Change Up/Down Buttons.
First press the SP Button, select the value column, and then enter the changeusing the ten-key dialog (using the mouse), or the keyboard. (The ten-key padis displayed when the input box is selected. To enable inputting from the tenkey,click the System Info. Button in the Setup Dialog Box, and then changethe setting to enable the ten-key.
·Changing MV
Change the MP using the MP Change Up/Down Buttons.
First press the MP Button, and then enter the change using the ten-key dialogbox (using the mouse), or the keyboard.
·Remote/Local(R/L)Switching
When the SP setting (local only, or remote/local both possible) for ITEM024for Basic PID, Advanced PID, Indication and Setting, Ratio Setting, 2-positionON/OFF, and 3-position ON/OFF is 1 (remote/local both possible), CAS is displayed.
When the CAS Button is red, the setting is on remote SP.
When the CAS Buttonis blue, the setting is on local SP.
Click the CAS Button to switch the setting.
Note: When the CX-Process Monitor Plus is set to Remote SP, A/M automatically switches to AUTO. You cannot set Manual.
·A/M switching
When AUTO is lit red, the setting is AUTO. You can change the SP value.
When MAN is lit blue, the setting is manual you can change MV and SP values.
Select AUTO or MAN to switch.

♦Display Examples

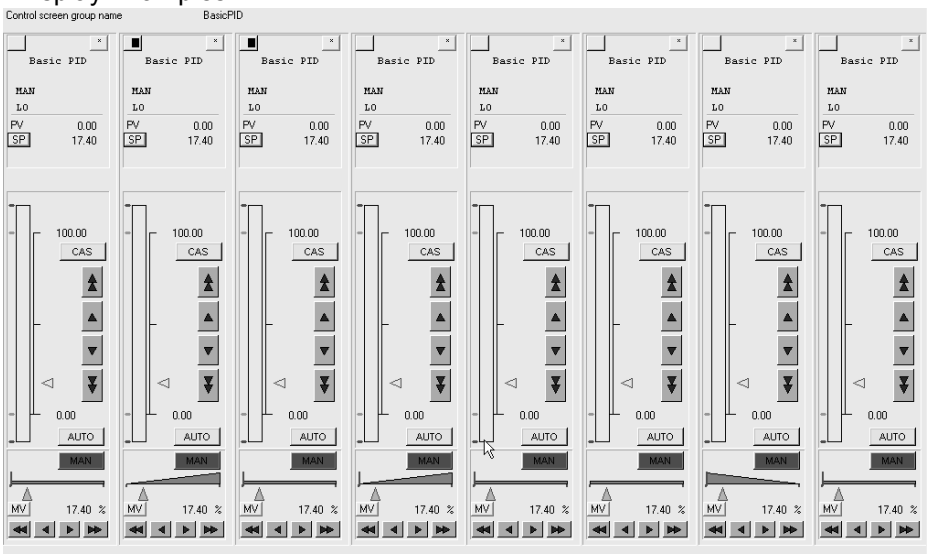

◆Tuning Screens

Use Tuning Screens, for example, to change Control Block P, I, and D constants, in control blocks.
You can set the parameters for PID Block P, I, D, and alarm set values.
You can make adjustments while monitoring PV, SP, and MV trends.
A maximum of 3,200 screens can be registered.
If an alarm occurs, the bar graph color changes.

Use one of the following methods to display the Tuning Screen.

- Select a button to move to the Tuning Screen on the Control Screen.
- Click the button displayed by the Control Screen icon in the Overview Screen.
- Click the button displayed on the upper left of Overview Screen and select tag No, in the ***Select tag No*** dialogue box or tag No list.

Click the text to display the dialog boxes for changing the settings. You can make changes uses the ten-key dialog box (using the mouse), or the keyboard. (The ten-key pad is displayed when you select the Enter box. Refer to *CX-Process Monitor Plus Operation Manual (W428) 5-6-3 Ten-key Settings* for then-key/keyboard switching settings.)

Refer to *CX-Process Monitor Plus Operation Manual (W428) 4-7 Control Screens* for how to operate.

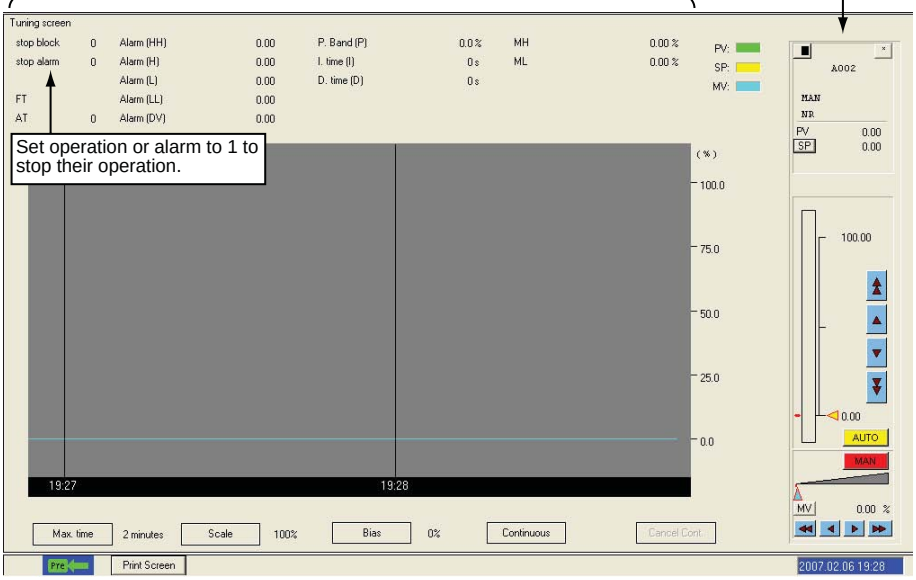

Select these buttons to display the dialog boxes for changing the settings.

Changing P, I, D

The following example shows how to change P (the proportional band).

(1)Click ***Proportional Band (P)*** displayed in the upper center of the screen. The ***Change Data*** dialog box will be displayed.

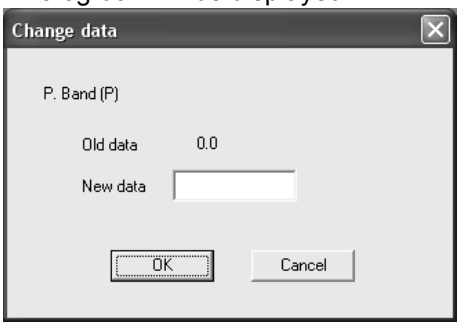

(2)Select the ***Change To Field***. The ten-key dialog box will be displayed as shown. Refer to ***5-6 System Information Settings*** in the ***CX-Process Monitos Plus Operation Manual (Cat. No. W428)*** to disable the ten-key pad (i.e., to input directly from the keyboard).

(3) After using the mouse (or the keyboard) to enter a numerical value, click the ***OK*** Button. The display will return to the **Change Data** dialog box shown in Step 1.

(4)Click the ***OK*** Button.You can change the settings for I (integral time) and D (differential time) in the same way.

◆Trend Screens

Trend Screens display changes in Control Block PV, SP, MV, and analog signals across the passage of time as recording meter images. To display the Trend Screen, click the Trend Screen Button in the Overview Window.

Real Time Trend Screen Display

The scale of the graph is adusted to the set value of the data that is selected.
Click the icon of the desired number to change the data.

Data values at the point in time displayed by this mark (the current value for the default) are displayed in the upper part of the screen.
You can drag this mark to move it about the screen.
All data is displayed as real numbers.

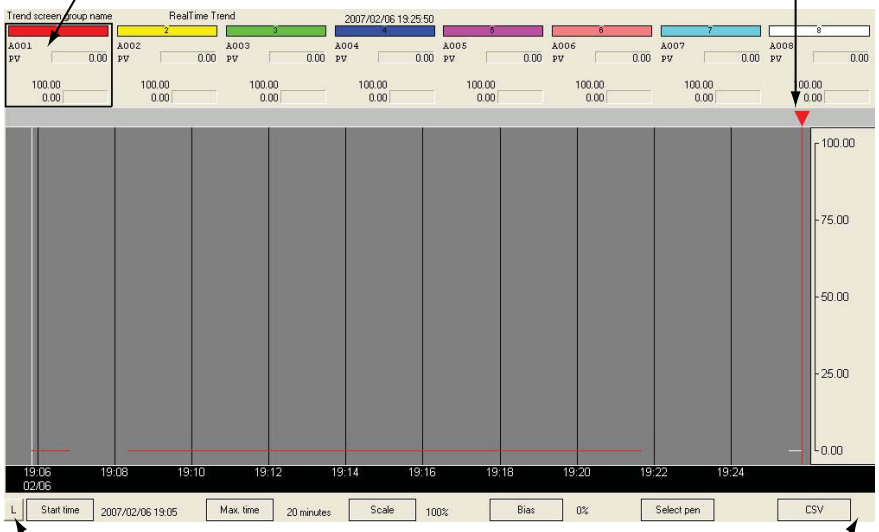

Time Scroll
Shifts one screen further to the past.

Time Scroll
Shifts one screen further to the future.

Function block PV, SP, MV, and analog signals output from the Send Terminal to Computer function block are collected in fixed cycles, the trend displayed, and simultaneously stored in a file.Trends are displayed as multi-dot recorder screen images to a maximum of eight dots per screen.
The following two Trend Screens are supported.

Data collection(Logger function)	Realtime Trend	10-s cycle, 480 Tags max., stored for 12 hours
	Historical Trend	60 s cycle, 960 Tags max., stored for 10 days
Data display	Horizontal axis: Time display axis: You can scroll through 2, 4, 8, 12, and 24-hour axes. Vertical axis: 8-dot all-points axis. You can magnify the gradations by 1x, 2x, 5x, or 10x. Specify the display start time to display data from that point in time. Display colors: Red, yellow, green, blue, magenta, purple, cyan, and white.	

Historical Trend Screen Display

The scale of the graph is adusted to the set value of the data that is selected.
Click the icon of the desired number to change the data.

Data values at the point in time displayed by this mark (the current value for the default) are displayed in the upper part of the screen.
You can drag this mark to move it about the screen.
All data is displayed as real numbers.

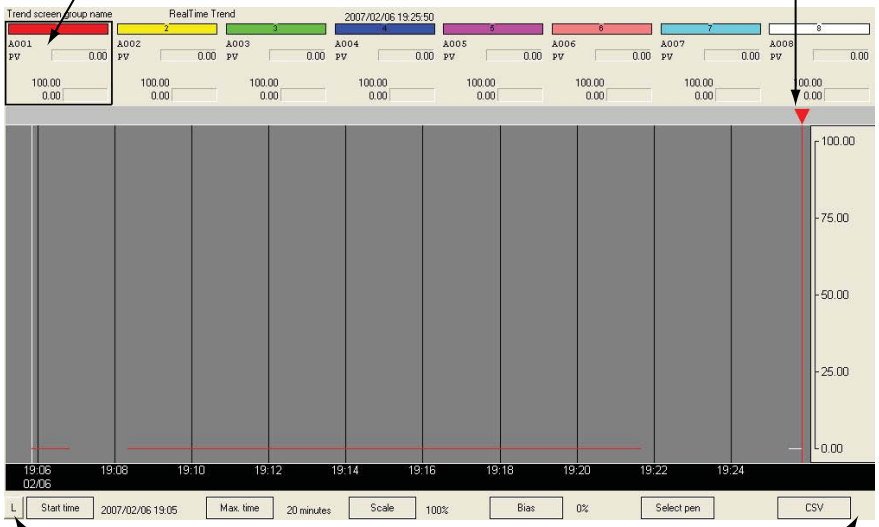

Time Scroll
Shifts one screen further to the past.

Time Scroll
Shifts one screen further to the future.

Batch Trend Screen Display

The scale of the graph is adjusted to the sat value of the data that is selected.
To change the data, click the area where the pen number is displayed.

The trend data collection status is displayed here.
Click here to open the Batch Collection Status Dialog Box.

References batch trend files of trend data collected in the past.

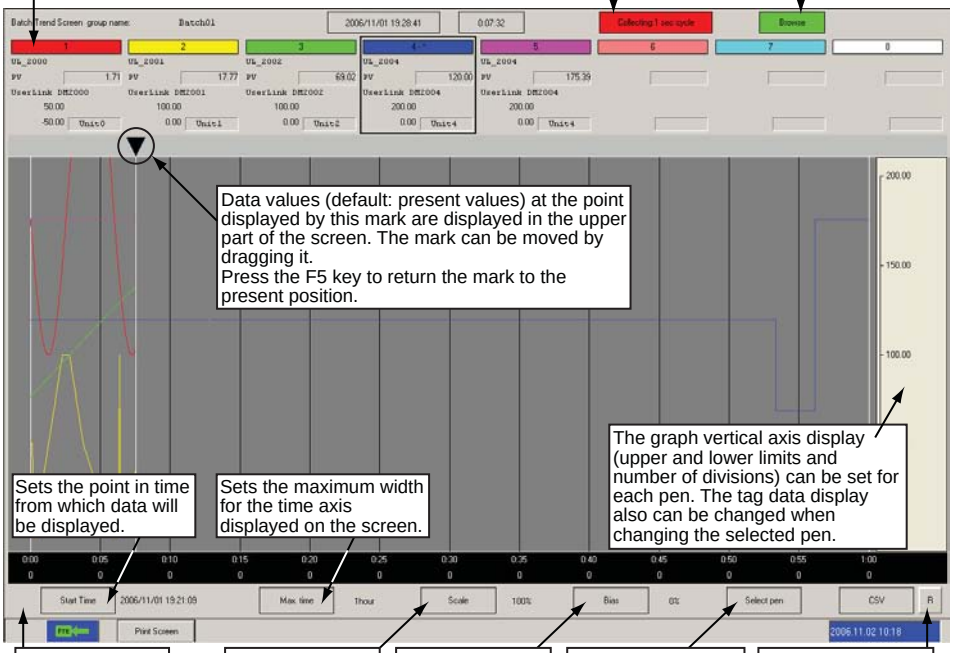

Data values (default: present values) at the point displayed by this mark are displayed in the upper part of the screen. The mark can be moved by dragging it.
Press the F5 key to return the mark to the present position.

The graph vertical axis display (upper and lower limits and number of divisions) can be set for each pen. The tag data display also can be changed when changing the selected pen.

Sets the point in time from which data will be displayed.

Sets the maximum width for the time axis displayed on the screen.

Time Scroll
Shifts one screen to the past.

Used to zoom the scale displayed.

Used to add bias to the display.

Used to select the pen to be displayed.

Time Scroll
Shifts one screen to the future.

information

Monitoring User Link Table

It is possible to change pen setting, and delete or add pen without shitting down CX-Monitor Plus.

♦Changing pen setting and deleting a pen.

(1)Double-click on the pen selection area.

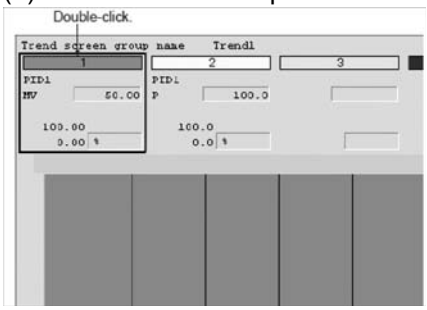

(2)***Update of pen information*** dialogue box will be displayed.

♦Adding Pen in the dialogue box.
To allocate a tag to a pen, use the following procedure.

(1)Double-click on the circled part on the screen as shown below.

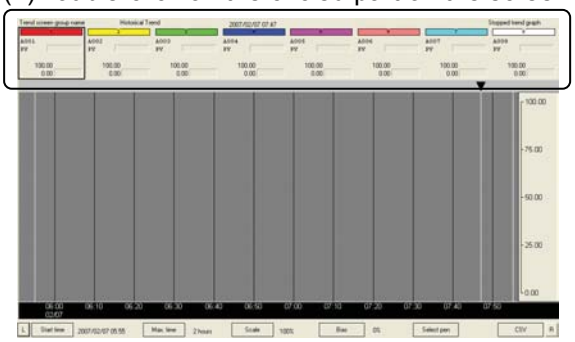

(2)The dialogue box to change pen will be displayed.

◆Segment Program 2 Screens

Operations such as monitoring operating conditions and setting step data for a Segment Program 2 (Block Model 157) function block can be executed using Segment Program 2 Screens. The monitored segment data can be automatically saved in a Segment Program 2 trend file.

Segment Program 2 trend files can be used to display previously collected segment data on Segment Program 2 Screens and to output the previous data to CSV files. The Segment Program 2 Screens are displayed by clicking the Segment Program 2 icon on the Overview Screen.

Segment Program 2 present values are displayed in a trend graph.

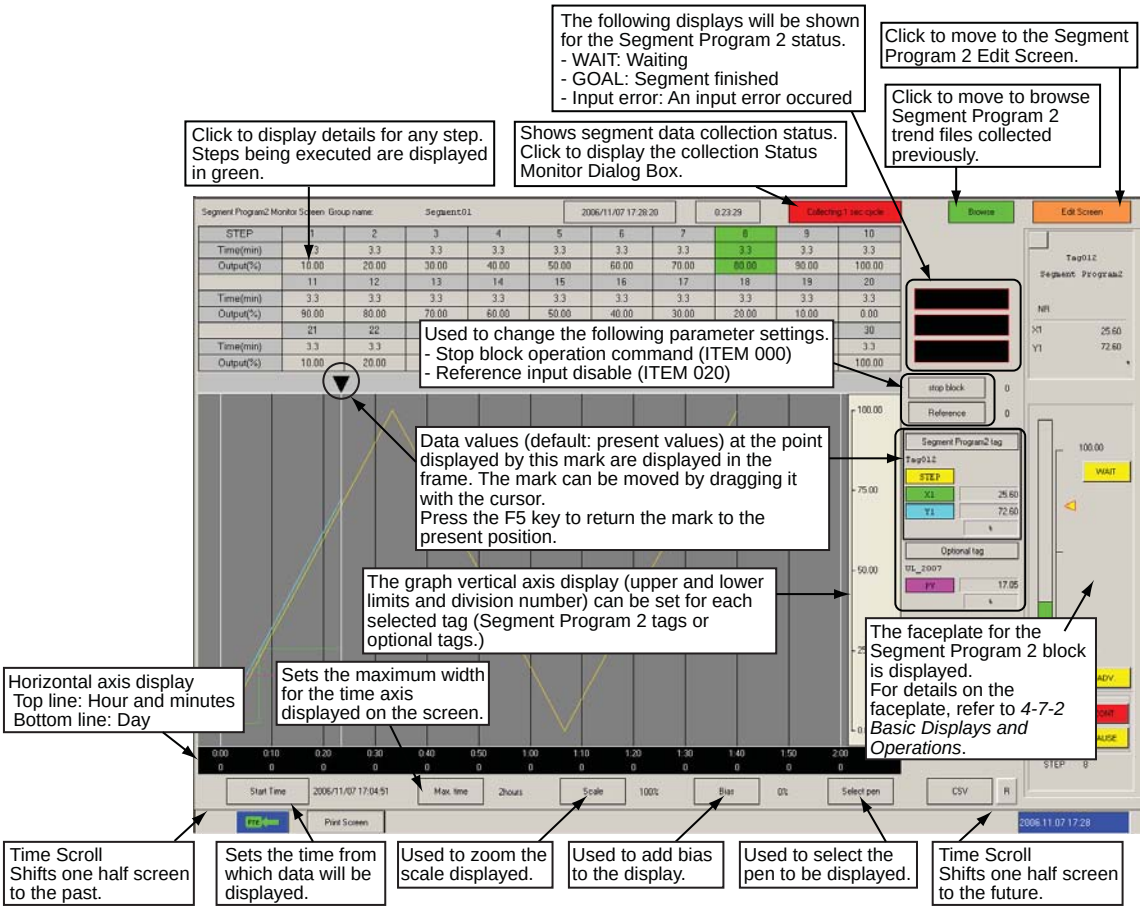

NOTE:

Step Data Display

When the Segment Program 2 Monitor Screen is displayed first, the step data is not displayed. (Step data is displayed by starting segment data collection.)

To check in advance the step data executed on the Segment Program 2 Monitor Screen, move to the Segment Program 2 Edit Screen.With the move to the Segment Program 2 Edit Screen, new Segment Program 2 step data is received from the Loop Controller and the display is updated on the Segment Program 2 Monitor Screen.

◆Graphic Screens

Graphic Screens display the status of the system or device in graphic form. To display the Graphic Screen, click the Graphic Screen Icon in the Overview Screen.

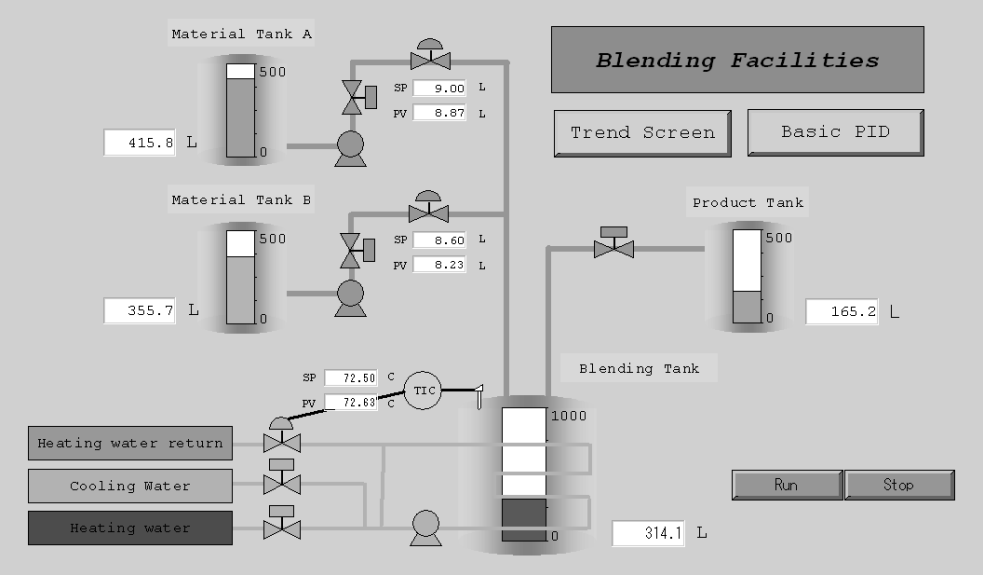

Paste the screen graphic elements representing plant instrumentation, which have been pre-prepared, and use them to display the device status, to a maximum of 200 screens.

Pre-prepared fixed graphic display elements: Text, instruments, thermometers, transmitters, orifices.

Pre-prepared changeable graphic display elements:

- Library figures and images: Text, lines, rectangles, round rectangles(rectangles with rounded corners), ellipses, polygons, and images
- Fixed graphic display elements: Text boxes, instruments, thermometers, transmitters, and orifices
- Changeable graphic display elements:
  Analog inputs: Bar graph displays, numerical value displays, and tanks
  Analog settings: Numerical settings (See note.)
  Contact inputs (display): Pumps, values, and pipes
  Contact settings (operation): Switches (See note.)
  Note: If making analog values or contact settings, use tags for Constant Generator (Block Model 166) and Internal Switch (Block Model 209).
- Screen display objects: Screen jump objects, FP switch (faceplate pop-up) objects

For other fixed graphics, import and paste created bitmap files. Basically, after cutting and pasting the other graphics for background, paste the pre-prepared fixed or changeable graphic display elements mentioned above.

◆Annunciator Screens

Annunciator Screens display comprehensively the contacts status (mainly the alarm status). To display the Annunciator Screen, click the Annunciator Screen icon on the Overview Screen.

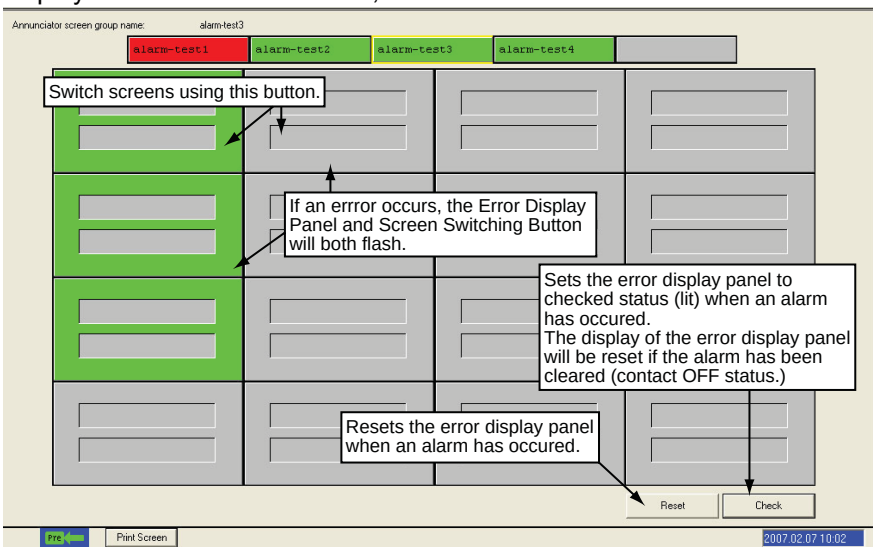

There are no particular limits to contacts that can be specified. Basically, however, register contacts that display the alarm status of the Control Block's HH (High/High Alarm), H (High Alarm), L (Low Alarm), and LL (Low/Low Alarm), etc.

If an alarm/error occurs, the icon color will change and a beep will sound. At the same time, two rows of eight wide-size characters making a user-registered message can be displayed.

3-4 Scaling

The Loop Controller handles analog values in percentage unit. Scaling in the PLC-based Process Control system is dealt with by the host (HMI software, etc) system.

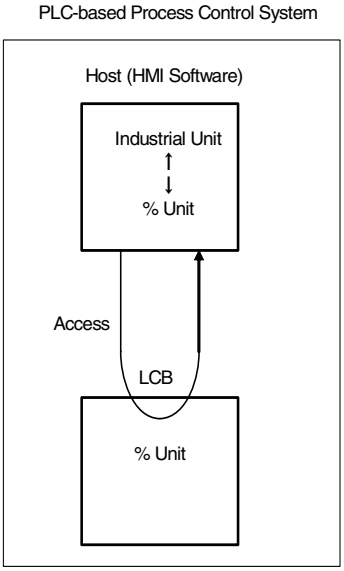

NOTE: The analog value in the Analog Input Unit is automatically handled in percentage unit (0.00 to 100.00%) in the Loop Controller when it is input through the Field Terminal Block.

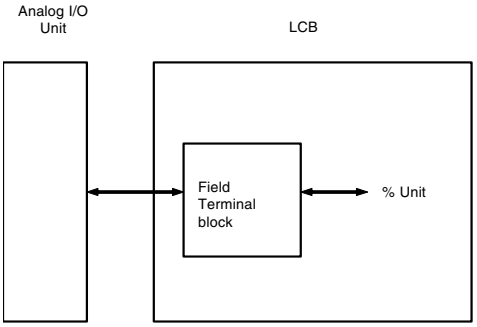

The settings required for each of the two examples below are different.

- Analog Input Unit is utilized with Loop Controller only.(Scaling for the Special I/O Unit Area allocated in the CPU Unit for the Analog Input Unit is not necessary).
- Scaling data in the Special I/O Unit Area allocated for the Analog Input Unit is utilized in the CPU Unit ladder program.

In case that Analog Input Unit is utilized for Loop Controller only.

(Scaling for the Special I/O Unit Area allocated in the CPU Unit for the Analog Input Unit is not necessary).

◆When Field Terminal Block can be utilized for the Analog Input Unit

For both of the Analog Input Unit which does not have scaling function and Analog Input Unit with scaling function, do not carry out scaling and enter 0 to 4000 in the Special I/O Unit Area. Analog values are automatically converted into 0.0 to 100.00% when they are input thourh the Field Terminal Block.

♦Analog Input Unit which does not have scaling function (CJ Series Analog Input Unit, CJ1W-AD0**).

There is no setting for scaling in the Field Terminal Block.

♦Analog Input Unit with scaling function (Process Input Unit CJ1W-P****).

Do not utilize scaling function of the Unit. (Allocated Specoal I/O Unit DM Area is default setting).

Enter the default value (0 to 4000) in the ***Input/Output range conversion setting*** (ITEM010, etc.) in the Field Terminal Block. (See NOTE.)

NOTE: To carry out the scaling in the maximum calculated resolution (10,000), set 1 to 10,000 in the Input/Output range conversion setting (ITEM010, etc.).

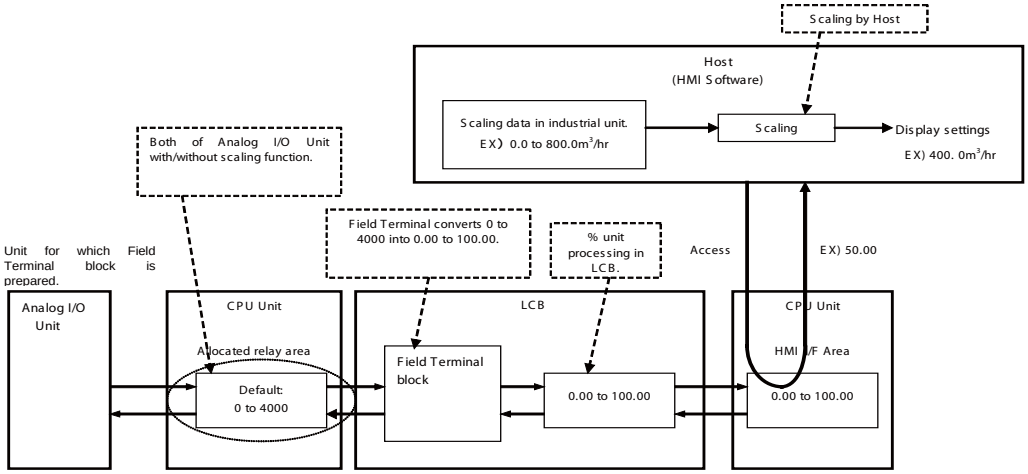

◆Analog Input/Output Unit for which Field Terminal is not prepared. (DeviceNet DRT2 Analog Terminal, etc.)

In the User Link Table, register the address of the analog input/output value which is allocated in the memory area of the CPU Unit. Check the box for ***ON*** in the ***Range Conversion*** and enter the values correspond to 0% and 100%.

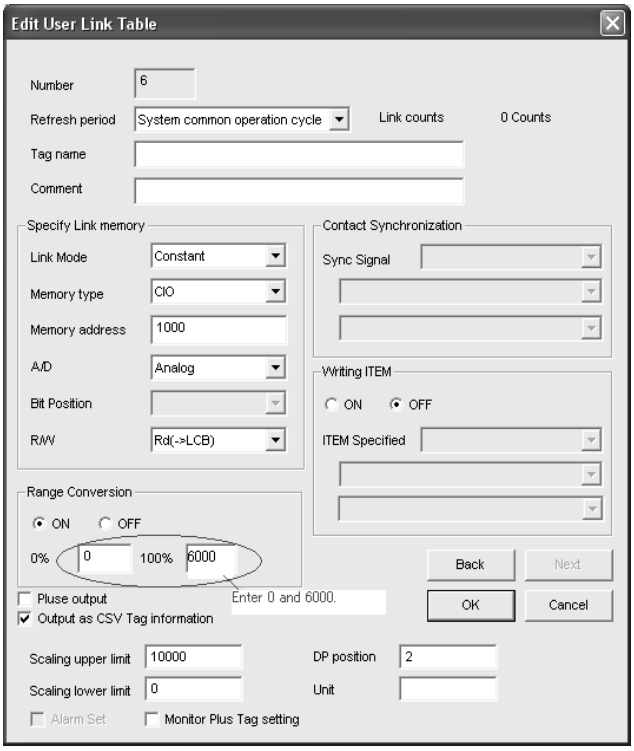

Example: The default range conversion settings for the DeviceNet Analog Terminal are 0 to 6000. Enter 0 to 0% and 6000 to 100% in the Range Conversion of the User Link Table.

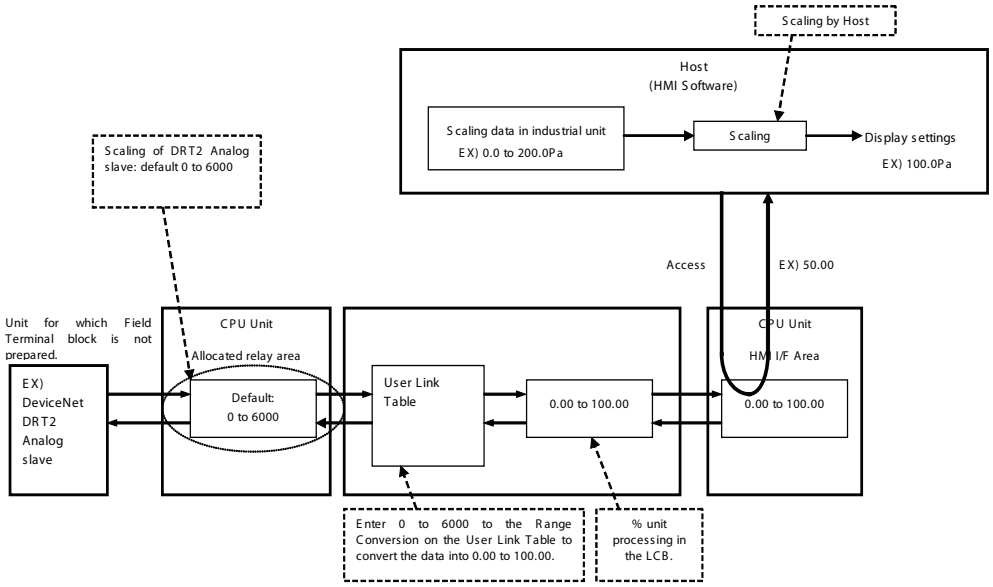

Utilizing the scaling data in the Special I/O Unit Area allocated for the Analog Input Unit for the CPU Unit ladder program.

◆Analog Input Unit for which Field Terminal block can be utilized.

Analog Input Unit with scaling function has its scaled data in the Special I/O Unit Area allocated in the CPU Unit. The scaled data is automatically converted into 0.0 to 100.00% by the Field Terminal Block and the Loop Controller take in the converted data.

For the Analog Input/Output Unit with scaling function (Process I/O Unit CS1W-P****), ener the Process Value Scaling (value stored for maximum value in range and value stored for miminum value in range) in the allocated DM Area.

For the ***Input/Output range conversion setting*** (ITEM010, etc.) in the Field Terminal Block, enter the same values.

With the setting above, Field Terminal Block can automatically convert scaled value in the Special I/O Area in the CPU Unit into 0.0 to 100.00%.

In the ladder program of the CPU Unit, scaled data in the Special I/O Unit Area allocated for the Analog Input Unit can be utilized.

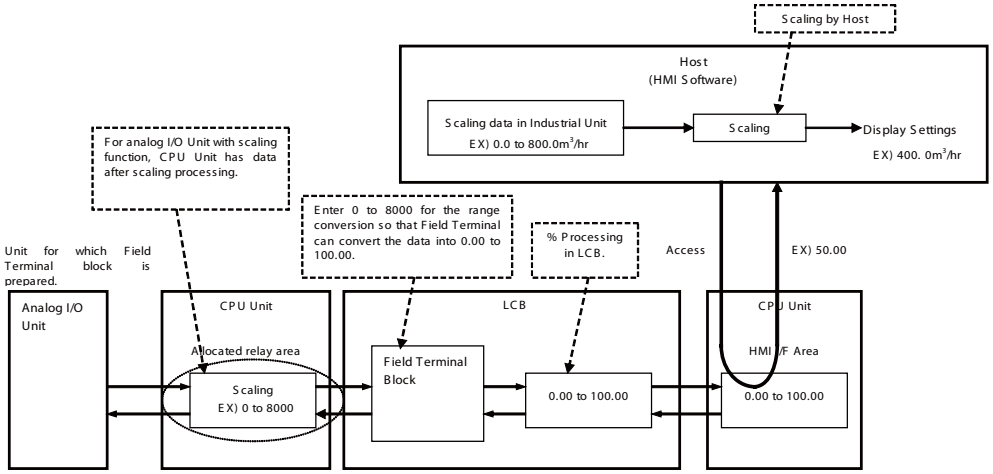

Example: Settings to carry out the scaling (0 to 8000) with CJ1W-PDC15.

Enter 0 and 8000 to the m+39and m+38 in the Special I/O DM Area (Process Value Scaling for Input No1.), respectively.

Set 0 to the ITEM011 and 8000 to ITEM 012 of the AI-2-point Terminal.(Block model 571). For ITEM 010, enter 9: Range specified at ITEM011 and ITEM012).

◆Analog Input/Output Unit for which Field Terminal is not prepaed. (DeviceNet DRT2 Analog Terminal, etc.)

In the Register User Link Table dialogue box, register the memory type and address allocated for the analog input/output value. Check the ***ON*** box for ***Range Conversion*** and set the values which correspond to 0% and 100%.

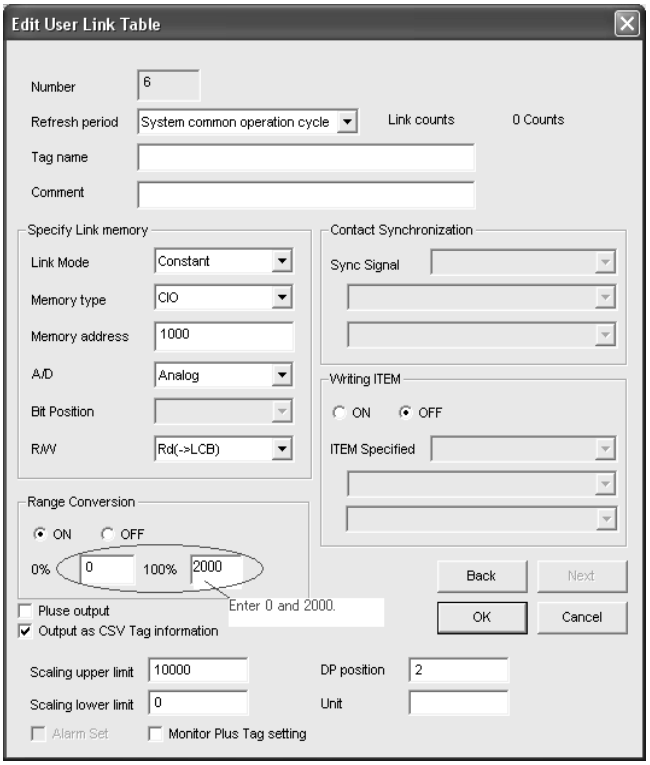

Example: DeviceNet Analog TerminalScaling can be carried out for the Device Net Analog Terminal. Enter process value scaling settings in the Range Conversion. In this example, set 0 to 0% and 2000 to 100%.

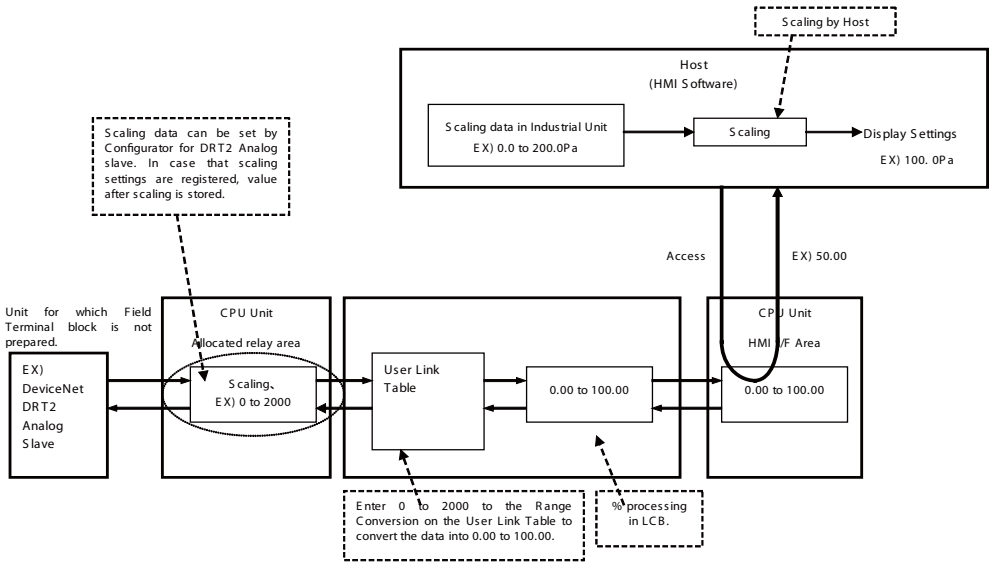

3-5 Order of Operations

The order of execution for all of the functions block that are to be executed in the same cycle is, first of all, determined by execution groups set by the system. Within these groups, the order of execution is determined either by the block addresses or, for control and operation blocks, by user settings or the arrangement of the blocks in the block diagram.
The groups set by the system are as follows:

(1)Input user link table blocks (including the Di and Ai field input terminals created as virtual blocks on the CX-Process Tool)
(2)System Common blockControl
(3)Operation, External Controller, Sequence Table, and Step Ladder blocks

- The default order of execution for control and operation blocks is in order of block address. The user, however, can set the system to execute control and operation blocks either according to user ITEM settings or according to their position in the block diagram. See CX-Process Tool Operation Manual (W372) for detailed information.
- External Controller blocks are executed in order of block address. Only one External Controller block is executed each cycle.
- Sequence Table and Step Ladder blocks are all executed each cycle in order of block address.
- Output User Link Tables (including the Do and Ao field output terminals created as virtual blocks on the CX-Process Tool)

a) When using user ITEM settingsSet ITEM 005 (Execution order) in each block from the CX-Process Tool. ITEM 005 can be set to between 1 and 2,000.
b) To execute according to block diagram position
Select Settings - Setting Block Operating Order from the menus. The function block diagrams will be executed in order from 1 on, and blocks within each function block diagram will be executed as shown in the example.

Free Location Mode (CX-Process Tool Ver.5.0 or later)

The operation is executed in the order below.

(1)Function block placed on smaller X-cordinate.
(2)Function block placed on the smaller Y-codinate.
The example below shows the block diagram in which nine function blocks are pasted. When Setting Block Operating Order is completed, function block diagram will be executed in order from 1, 2, 3, etc., through 9. (Function blocks on the broken line are executed in the order of 4 to 5, and 8 to 9 because their Y-cordinate of 4 and 8 are smaller than that of 5 and 9, respectively).

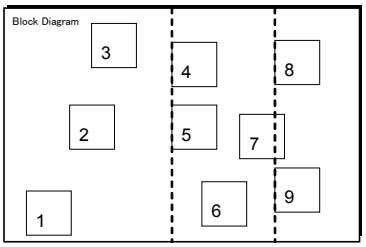

3-6 Load Rate of the Loop Controller

The minimum operation cycle of each of the function blocks on the Loop Controller can be set to 0.01 sec. However, when many function blocks are utilized, the processing capability of the Loop Controller prevents processing at the specified operation cycle. For this reason, the Loop Controller is provided with the load rate concept as an indicator of its processing capability. This load rate is one condition to determine the operation cycle of the function blocks.
The load rate of the Loop Controller is a fixed load rate plus the summation of all actual execution times (the time required for execution before idling) divided by the corresponding set operation times.

$$\text{LCB Load Rate} = \Sigma \frac{\text{Actual Operation Cycle}}{\text{Set Operation Cycle}} + \text{Fixed Load Rate}$$

The actual operation execution cycle is a total of the following two times:

- Overhead time (FINS command communications and internal processing)
- Total operation execution time of each function block in the same operation cycle group.

Evaluating the LCB Load Rate at the System Design Stage

The guideline LCB load rate for function blocks on the Loop Controller is 80%.
At the system design stage study whether or not the LCB load rate of each function blocks is 80% or less.
Though errors caused by PID and other operations do not occur when the LCB load rate exceeds 80%, use the Loop Controller at a LCB load rate of 80% or lower as there is possibility that the LCB load rate will temporarily increase due to fluctuations in the overhead time of FINS command communications and internal processing.
Monitor the maximum LCB load rate from the CX-Process Tool system operation verification function. (Select ***Operation - Validation*** from the ***Execute*** Menu and check the value of ***ITEM 048Maximum LCB load rate***. The value that is given will be the largest LCB load rate since operation was begun. If the LCB load rate exceeds 100%, operation will continue and the operation cycles will be exceeded as shown below. There will be errors, however, in PID calculations.

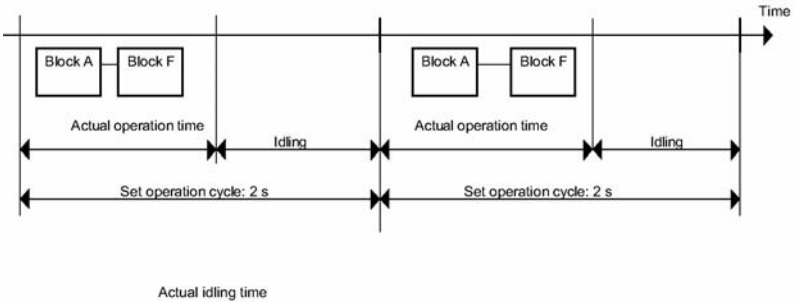

Take the following steps if the LCB load rate exceeds 80%.

(1)If there are any blocks for which a longer operation cycle can be set without affecting the applications, increase their operation cycles.
(2)If the LCB load rate still exceeds 80% and the operation cycles cannot be increased any further, add on a CPU Unit.If a CPU Unit cannot be added, add on a Loop Control Unit (up to three Loop Control Units can be mounted on a single PLC) and distribute processing between the mounted Units.
(3)If a CPU Unit cannot be added, add on a Loop Control Unit (up to three Loop Control Units can

be mounted on a single PLC) and distribute processing between the mounted Units.

Monitoring the LCB load rate at the trial operation stage

At the trial operation stage, monitor which value the LCB load rate actually reaches at the preset operation cycle(s) on CX-Process Tool.
Follow the procedure below to monitor the LCB load rate.

(1)Download the function block data to the Loop Controller.
(2)Start operation of the Loop Controller using CX-Process Tool or by turning the PLC power OFF then back ON again.
(3)Establish the connection to CX-Process Tool, and select ***Operation - Run monitor status*** from the ***Execute*** menu.

The following LCB load rates (current LCB load rate and maximum LCB load rate) are displayed in the Run monitor status screen:
Each of the current LCB load rates and maximum LCB load rates for the system common operation cycle and each of the 0.1 s/0.2 s/0.5 s/1 s/2 s operation cycle groups. If the maximum LCB load rate of a certain operation cycle group exceeds 80%, change the operation cycle of function blocks among function blocks within that group, for which an increased operation cycle will not affect the application, to a longer operation cycle (group).
If it is estimated that an operation cycle longer than this cannot be set when the LCB load rate exceeds 80%, add on a CPU Unit or a Loop Control Unit (up to three Loop Control Units can be mounted on a single PLC) and distribute processing between the mounted Units.

NOTE: The LCBs do not support the automatic operation cycle switching function of the Loop Control Units. The High Load Alarm Flag (A42408), however, will turn ON if the LCB load rate exceeds 80% for 6 seconds. If this bit turns ON, use longer operation cycles or add Loop Control Units to distribute processing.

3-7 External I/O Response Time

Loop Controller exchanges field I/O value (analog input/output value and contact input/output signal) with external system in the following procedure.

(1)Analog Input/Output Unit or Basic I/O board executes I/O Refresh and refreshs CPU I/O Memory.

(2)Loop Controller exchanges data which is allocated in the CPU Unit I/O Memory with the CPU Unit according to the operation cycle of each Function block.

Example: Analog input - PID Operation - Analog output

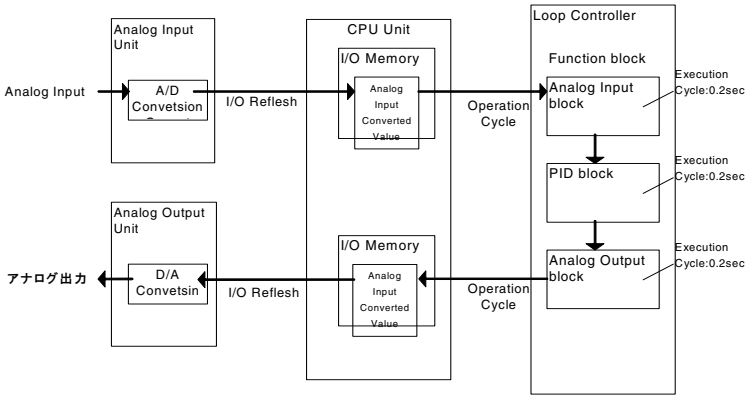

External I/O Response Time mentioned here means the total system response period, which consists of the following: Analog Unit read out the analog input value afer a change of analog input data, PID Opeation execution, and Analog output value is output through Analog Output Unit.
Use the following calcuration fomula to calcurate the External I/O Response Time.

Maximum External I/O Response Time

♦CJ1G-CPU**P

Maximum External I/O Response Time = 2 x A/D conversion period+(2xCY)+(2xT)+2xD/A conversion period

CY: CPU Unit cycle time, T: Operation cycle

Example: Cycle time=20ms, operation cycle=0.1 sec (100ms), A/D conversion period=8ms, D/A conversion period=8ms,

Maximum External I/O Response Time= 2 x 8ms + (2x20ms) + (2x100ms) + 2x8ms= 272ms

Minimum External I/O Response Time

♦CJ1G-CPU**P

Minimum External I/O Response Time=A/D conversion period+{(1.0xT)+ D/A conversion period.

T: Operation cycle

Example: Operation cycle=0.01 sec (10ms), A/D conversion period=1ms, D/A conversion period=1ms

Minimum External I/O Response Time=1ms+(1.0x10ms)+ 1ms=12ms

3-8 Errors and Alarm Troubleshooting

CPU Unit Errors

Error Categories

Errors in CS/CJ-series PLCs can be broadly divided into the following three categories.

Categories	Result	LED Indicators on front of CPU Unit		Comments
		RUN	ERR/ALM	
CPU Standby	The CPU Unit will not start operation in RUN or MONITOR mode.	OFF	OFF	
Non-Fatal Errors	The CPU Unit will continue operating in RUN or MONITOR mode.	ON (Green)	Flashing (Red)	Other indicators will also operate when a communications error has occurred or the Output OFF Bit is ON.
Fatal Errors	The CPU Unit will stop operating in RUN or MONITOR mode.	OFF	ON (Red)	The indicators will all be OFF when there is a power interruption.

Error Information

There are basically four sources of information on errors that have occurred:

- The CPU Unit's indicators
- The Auxiliary Area Error Flags
- The Auxiliary Area Error Information Words
- The Auxiliary Area Error Code Word

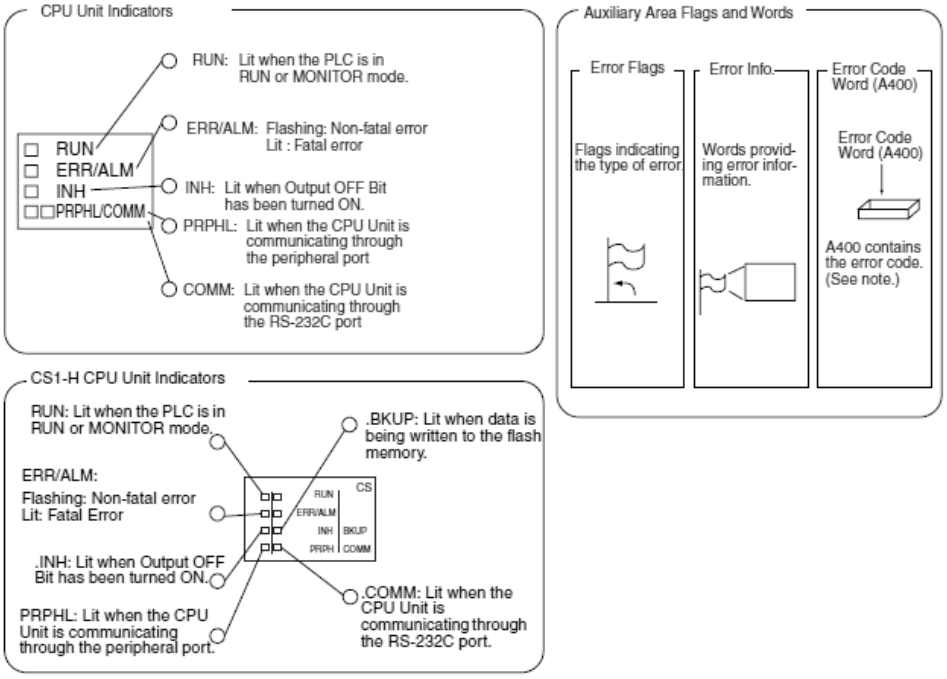

◆Indicator Status and Error Conditions

The following table shows the status of the CPU Unit's indicators for errors that have occurred in RUN or MONITOR mode.

LED*	CPU Error	CPU Re-set	CPU Standby	Fatal Er-ror	Non Fatal Error	Communications Error		Output OFF
						Peripher-al Port	RS-232C Port	
RUN	OFF	OFF	OFF	OFF	ON	ON	ON	ON
ERR/ALM	ON	OFF	OFF	ON	Flashing	-	-	-
INH	OFF	OFF	-	-	-	-	-	ON
PRPHL	-	-	-	-	-	OFF	-	-
COMM	-	-	-	-	-	-	OFF	-

Error Codes and Error Flags

Classification	Error Name
Fatal system errors	Memory error
	I/O bus error
	I/O bus error B
	Duplicated number error
	Too many I/O points
	I/O setting error
	Program error
	Cycle time too long
	Expansion Rack number duplicated
	Fatal Inner Board error
Non-fatal systemerrors	Interrupt task error
	Basic I/O error
	PLC Setup setting error
	I/O verification error
	INNER Board error
	CS1-series CPU Bus Unit error
	Special I/O Unit error
	SYSMAC BUS error
	Battery error
	CS1-serise CPU Bus Unit setting error
	Special I/O Unit setting error
User-defined non-fatal errors	FAL(006) error (4101 to 42FF are stored for FAL numbers 001 to 511)
User-defined fatal errors	FALS(007) error (C101 to C2FF are stored for FALS numbers 001 to 511)

Errors and Alarm Troubleshooting

Judging Errors by Indicators

Indicator	Name	Color	Status	Description
RDY	Ready	Green	Not lit	The Loop Controller is not operating for one of the following reasons: A Fatal Inner Board Error occurred (A40112 ON.) Initialization is not completed yet. A fatal error occurred. The flash memory backup data is invalid. The Loop Controller is initializing. A hardware failure occurred in the Loop Controller. Power is not being supplied from the Power Supply Unit. A Loop Controller WDT error occurred.
			Flashing	A WDT error occurred in the CPU Unit.
			Lit	The Loop Controller is ready for operation.
EXEC	Running	Green	Not lit	The system is stopped for one of the following reasons: The Loop Controller is initializing. A hardware failure occurred in the Loop Controller. Power is not being supplied from the Power Supply Unit. A Loop Controller WDT error occurred. The Loop Controller is not running. Data is being written to flash memory.
			Flashing at 0.5-s intervals	Data is being deleted from Process-control CPU Unit (CS1D-CPU**P) flash memory.
			Flashing at 0.2-s intervals	Function block data is being backed up to flash memory.
			Lit	The Loop Controller is running.
COMM	Communicating	Yellow	Not lit	Waiting for data transfer.
			Flashing	Transferring data.

Errors during Initialization

The following table lists errors that can occur during the initial processing performed after the power is turned ON or the Inner Board is restarted.

LED Indicators on front of Loop Controller		LED Indicator on front of CPU Unit	Problem	Cause	Status	Error code (Stored in error log.)	Corrective action
RDY	EXEC	ERR/ALM (See note.)					
Not lit	Not lit	Undetermined	Power supply problem	The correct internal power supply is not being supplied to the Loop Controller.	Operation is stopped.	None	Check the power supply voltage and verify that the correct voltage is being supplied. Also, check the PLC's total current consumption.
				The Loop Controller is not mounted properly in the CPU Unit.			Mount the Loop Control Board securely. Replace the Loop Control Board if the error recurs after the Board is secured and power is turned ON again.
				The Loop Controller is faulty.			Turn the power OFF and ON again. If the error occurs with a Loop Control Board, replace the Loop Control Board.If the error occurs with the Loop Controller component of a Loop-control CPU Unit, replace the entire Loop-control CPU Unit.
Not lit	Not lit	Lit	Initial recognition error (Inner Board Stopped Error)	The Loop Controller was not recognized properly by the CPU Unit.	Operation is stopped.	None	Mount the Loop Control Board securely. Replace the Loop Control Board if the error recurs after the Board is secured and power is turned ON again. If the error occurs with the Loop Controller component of a Loop-control CPU Unit, replace the entire Loop-control CPU Unit.
Not lit	Not lit	Lit	Inner Board Error	A hardware error was detected (in memory or elsewhere) during the self-diagnostic test.	Operation is stopped.	None	Turn the power OFF and ON again. Replace the Loop Control Board if the error occurs.If the error occurs with the LoopController component of a Loop-control CPU Unit, replace the entire Loop-control CPU Unit.

LED Indicators on front of Loop Controller		LED Indicator on front of CPU Unit	Problem	Cause	Status	Error code (Stored in error log.)	Corrective action
RDY	EXEC	ERR/ALM (See note.)					
Not lit	Not lit	Flashing (A42404, the Incompatible CPU Unit Error Flag, is ON.)	Incompatible CPU Unit	·The CS1W-LCB01/05 Loop Control Board is not mounted under one of the following CPU Units: CS1G-CPU**H CS1H-CPU*H The Process-control CPU Unit (CS1D-CPU**P) Loop Controller is not mounted under a CS1D-CPU**H CPU Unit.	Operation is stopped.	None	Replace the CPU Unit with one of the compatible models.
				All the EM banks have-been converted into filememory.			Change the setting so that the EM banks are not converted into file memory.
Not lit	Not lit	Lit (A42401, the Inner Board Bus Error Flag, is ON.)	Inner Board Bus Error	An Inner Board Bus Error has occurred.	Operation is stopped.	None	Mount the Loop Control Board securely. Replace the Loop Control Board if the error recurs after the Board is secured and power is turned ON again.If the error occurs with the Loop Controller component of a Loop-control CPU Unit, replace the entire Loop-control CPU Unit.
Not lit	Not lit	Lit (A42403, the Flash Memory Data Error Flag or the Duplex Function Block Database (RAM) Error Flag, is ON.)	Parameter backup data (flash memory) error	One of the following problems was detected during a cold start. 1) The data was corrupted by noise or other factor.2) The power was interrupted during a backup.Note: If the function block database (RAM) is valid, the data will be backed up again the next time the power is turned ON.	Operation is stopped.	0331 The details code contains either the relevant block address or FFFF if all data bases are invalid.	Execute the Download or Clear all operation from CX-Process Tool Version 3.0. The Flash Memory Data Error Flag (A42403) will go OFF if the data in RAM becomes valid.

LED Indicators on front of Loop Controller		LED Indicator on front of CPU Unit	Problem	Cause	Status	Error code (Stored in error log.)	Corrective action
RDY	EXEC	ERR/ALM (See note.)					
Flashing	Not lit	Flashing(A42410, the is ON	Parameter	One of the following problems was detected while restoring data using the simple backup function.. The Memory Card is not mounted.. The Loop Controller model is different from that used to create the project saved in the Memory Card.. The function block data backed up in the Memory Card is corrupted.. There is an empty backup file on the Memory Card created for a simple backup operation performed for a Loop Controller for which a password has been set.Note: Turn the CPU Unit power from OFF to ON while pin 7 of the DIP switch on the front of the CPU Unit is ON.	Operation is stopped.	None	Reinstall the Memory Card used to back up the function block data (using simple backup), and cycle the CPU Unit power while leaving pin 7 of the DIP switch on the front of the CPU Unit turned ON.

Errors during Normal Operation

LED Indicators on front of Loop Controller		LED Indicator on front of CPU Unit	Problem	Cause	Status	Error code (Stored in error log.)	Corrective action
RDY	EXEC	ERR/ ALM(See note.)					
Lit	Lit	Not lit	Normal condition	Loop Controller operating normally.	-	None	-
Lit	Not lit	Not lit	Normal condition	The Board is stopped for either of the following reasons.			
				Normal stop of operation	-	None	-
				CPU Unit is waiting.		None	Refer to the CPU Unit's Operation Manual and clear the CPU Unit's waiting status.
Lit	Lit	Flashing (Partial function block database (RAM) error during simplex operation, A42410 turns ON.)	Partial function block database (SRAM) error during simplex operation	A partial function block database (RAM) error was detected in self-diagnosis during operation in either duplex SPL mode or simplex operation.	For only a partial database error, operation stops only for the relevant function blocks (nonfatal error).	0331 The details code contains either the relevant block address or FFF if all data bases have an error.	Execute the Download or Clear all operation from CX-Process Tool Version 3.0 or later. The RAM Error Flag (A42410) will go OFF if the data in RAM becomes valid.
		Flashing (Incompatible Operation Cycle Flag (A42409) turns ON.)	The Loop Controller is operating with a high load rate (error during duplex operation only).	(CS1D-CPU**P only) Loop Controller operation cycle error due to long CPU Unit cycle (CPU Unit cycle time is greater than 30% of the minimum Loop Controller operation cycle.)	Operation continues with a large error in the operation cycle (nonfatal error).	None	Set a longer minimum Loop Controller operation cycle (5 times the CPU Unit cycle time or longer).
		Flashing (A42408, the Loop Controller High Load Flag, is ON.)	The Loop Controller is operating with a high load rate.	The LCB load rate exceeded 80% continuously for 6 seconds.	Operation continues although the operation cycle setting is exceeded (non-fatal error.)	None	Adjust each function block's operation cycle so that the LCB load rate is below 80%. Another solution is to add a Loop Control Unit to the PLC and shift some of the load to that Unit.

LED Indicators on front of Loop Controller		LED Indicator on front of CPU Unit	Problem	Cause	Status	Error code (Stored in error log.)	Corrective action
RDY	EXEC	ERR/ ALM(See note.)					
Not lit	Not lit	Lit (A42400, the Inner Board WDT Error Flag, is ON.)	An Inner Board WDT Error occurred.	The Inner Board is malfunctioning.	Operation is stopped (fatal error.)	None	Turn the power OFF and ON again. Replace the Loop Control Board if the error recurs when the power is turned ON.
		Lit (A42401, the Inner Board Bus Error Flag, is ON.)	Inner Board Bus Error	An Inner Board Bus Error occurred.	Operation is stopped (fatal error.)	0014	Mount the Loop Control Board securely. Replace the Loop Control Board if the error recurs after the Board is secured and power is turned ON again.
		Lit (A42403, the Flash Memory Data Error Flag, is ON.)	Parameter back-up data (flash memory) error	One of the following problems was detected during a cold start with the CS1W-LCB01/05 or a cold or hot start with the CS1D-CPU**P.1) The data was corrupted by noise or other factor.2) The power was interrupted during a backup. (See note.)3) The power was interrupted during duplex initialization (CS1D-CPU**P only)Note: If the function block database (RAM) is valid, the data will be backed up when power is turned ON again.	Operation is stopped (fatal error.)	0331 The details code contains either the relevant block address or FFFF if all data bases are invalid.	Execute the Download or Clear all operation from CX-Process Tool Version 3.0. The Flash Memory Data Error Flag (A42403) will go OFF if the data in RAM becomes valid.
		None of the above	CPU Unit Fatal Error	A fatal error occurred in the CPU Unit.	Operation is stopped (fatal error.)	None	Refer to the CPU Unit's Operation Manual and clear the fatal error.
Flashing	Not lit	Lit	CPU Unit WDT Error	A CPU Unit WDT Error occurred.	Operation is stopped (fatal error.)	0001	Refer to the CPU Unit's Operation Manual.

3-9 Contents of a CSV Tag File

Setting	Setting range		
	HMI tags	User Link Table tags	OPC Server Direct Access Tag *3
Record number	1 to 65535	Same as HMI tags	
Function block file name	Max. 6 characters	Same as HMI tags	FDAC+Node No.
LCU name	Max. 6 characters	LCB01, LCB03, LCB05, LCB05D	Same as HMI tags
Tag name (representative tag)	Max. 16 characters (Unusable characters: None)	LNK (fixed)	
Tag ITEM	Fixed for each function block ITEM	User Link Table tag name	
Tag comment	Max. 16 characters (Unusable characters: None)	User Link Table tag comment(max. 23 characters) (Unusable characters: None)	
Tag type	0: Analog, 1: Contact	Same as HMI tags	
Data attribute *1	I: INT, U: UNIT, 0: Contact	Same as HMI tags	0: Contact B:1byte data, U:UINT I:INT
Contact alarm tag (See note 1.)	0: Normal, 1: Alarm	0	0
Scaling upper limit	-5000 to 99999 (Example for DP position of 1: -550.0 to 9999.9)		Same as HMI tags
Scaling lower limit	-5000 to 99999 (Example for DP position of 1: -550.0 to 9999.9)		
Decimal point position (for scaling)	0 to 9		
Unit	Max. 8 characters (Unusable characters: None)		
Data range upper limit	-340680 to 330779 (When scaling for +/- 320% data is executed with the setting of Upper Limit 99999 and Lower Limit-5000).	65535(fixed)	
Data range lower limit	-340680 to330779 (When scaling for +/- 320% data is executed with the setting of Upper Limit 99999 and Lower Limit-5000).	-32768(fixed)	
Network address	0 to 127	0 to 127	
Node address	1 to 32	1 to 32	
Unit address	16 to 31,225	225 225	
I/O memory area	0: CIO, 1: W, 2: H, 3: D, 4: E0, 5:E1,6: E2,,,,,15:EB, 16:EC	0: CIO, 1: W, 2: H, 3: D, 4: E0, 5:E1,6: E2,,,,15:EB, 16:EC	99(fixed)
I/O memory address	0 to 65535	0 to 65535	0
Bit position	0 to 15	0 to 15	0
Block Model	0 to 999	-1	Same as HMI tags
Block address	0 to 999	-1	
ITEM number	0 to 999	-1	
Offset (write data) *2	+/-32767 0: Same address for read and write, Not 0: Read address + offset	0	0
Read/write	R: Read, RW: Read/write, W: Write	R: Read, W: Write	Same as HMI tags
Range Conversion Upper Limit	0	-32000 to 32000	0

Setting	Setting range		
	HMI tags	User Link Table tags	OPC Server Direct Access Tag*3
Range Conversion Lower Limit	0	-32000 to 32000	0

*1: The data attribute and contact alarm tag are used mainly by HMI software.

*2: Offsets are stored for reading and writing for the Loop Controller ITEM numbers. If the I/O memory addresses for reading and writing in the CPU Unit are the same, the offset will be 0. If the addresses are different, the read address will be used as a bases and the offset, n, will show the offset to the write address, i.e., write address = read address + n.

*3: Utilized for SYSMAC OPC Server. SYSMAC OPC Server is sold in only Japanese market.

3-10 List of Function Blocks

*1: the Function Blocks dealing with high-speed operation (operation cycle: 0.01, 0.02, and 0.05 seconds is possible). However, Not supported by the LCB05D.
*2: LCB01/05 Ver.1.5 or later only.
*3: LCB05/05D only.
*4: LCB01/05 Ver 2.0 or later and LCB03 only.
*5: CS-series only.
*6: CJ-series only.
*7: LCB01/03/05 Ver.3.0 or later only.

Category	Type	Block Model	Block Name	Function	Allocatable Block Address
System Common Block		000	System Common	Makes settings common to all function blocks and outputs signals for the system.	000
Control BlockControl Block	Controller	001*1	2-position ON/OFF	2-position type ON/OFF controller	LCB05/05D: 001 to 500 LCB03: 001 to 300 LCB01: 001 to 050
		002*1	3-position ON/OFF	3-position type ON/OFF controller for heating/cooling ON/OFF control	
		011*1	Basic PID	Performs basic PID control.	
		012*1	Advanced PID	Performs PID with two degrees of freedom control for enabling deviation/MV compensation, MV tracking, etc.	
		013	Blended PID	Performs PIF control on the cumulative value (cumulative deviation) between the accumulated value PV and accumulated value Remote Set Point.	
		014	Batch Flowrate Capture	Functions to open the valve at a fixed opening until a fixed batch accumulated value is reached.	
		016	Fuzzy Logic	Outputs up to two analog outputs based on fuzzy logic performed on up to 8 analog inputs.	LCB05/05D: 001 to 100 LCB03: 001 to 100 LCB01: 001 to 050
		031*1	Indication andSetting	Setting Manual setter with PV indication and SP setting functions	LCB05/05D: 001 to 500 LCB03: 001 to 300 LCB01: 001 to 050
		032*1	Indication and Operation	Manual setter with PV indication and MV setting functions	
		033*1	Ratio Setting	Ratio and bias setter with PV indication and ratio setting function	
		034*1	Indicator	PV indicator with PV alarm	
External Controller Block	External Controller Block	045	ES100X Controller Terminal	Performs monitoring and setting for an ES100X Controller connected directly to the RS-232C port on the Loop Control Unit.	LCB01/05: 601to 632 LCB05D, LCB03: Not supported.
Operation Block	Alarm/Signal restrictions/ Hold	111*1	High/Low Alarm	Provides the alarm contact outputs for the high and low limits of single analog	LCB05/05D:001 to 500 LCB03: 001 to 300 LCB01: 001 to 050
		112*1	Deviation Alarm	Provides the alarm contact outputs for the deviation of two analog signals.	
		113*1	Rate-of-change Operation and Alarm	Provides the alarm contact outputs for the high and low limits of rate-of-change	
		115*1	High/Low Limit	Limits the high and low limits of singleanalog signals.	

Category	Type	Block Model	Block Name	Function	Allocatable Block Address
Operation Block	Alarm/Signal restrictions/ Hold	116*1	Deviation Limit	Calculates the deviation between two analog signals, and limits the deviation within that range.	LCB05/05D:001 to 500 LCB03: 001 to 300 LCB01: 001 to 050
		118*1	Analog Signal Hold	Holds the maximum, minimum or instantaneous value of single analog signals.	
	Arithmetic Operation	121*1	Addition or Subtraction	Performs addition/subtraction with gain and bias on up to 4 analog signals.	
		122*1	Multiplication	Performs multiplication with gain and bias on up to 2 analog signals.	
		123*1	Division	Performs division with gain and bias on up to 2 analog signals.	
		126*1	Arithmetic Operation	Performs various math operation (trigonometric. logarithmic, etc.) on floating-point decimal values converted (to industrial units) from up to 8 analog inputs.	LCB05/05D:001 to 100 LCB03: 001 to 100 LCB01: 001 to 050
		127*1	Range Conversion	Easily converts up to 8 analog signals simply by inputting the 0% and 100% input values and 0% and 100% output values.	LCB05/05D: 001 to 500 LCB03: 001 to 300 LCB01: 001 to 050
	Functions	131*1	Square Root	Performs square root extraction (with low-end cutout) on single analog signals.	LCB05/05D: 001 to 500 LCB03: 001 to 300 LCB01: 001 to 050
		132*1	Absolute Value	Outputs the absolute value of single analog signals.	
		133*1	Non-linear Gain (Dead Band)	Performs non-linear (3 gain values) operation on single analog signals. Analog signals can also set as a dead band (with different gap).	
		134*1	Low-end Cutout	Sets output to zero close to the zero point of single analog signals.	
		135*1	Segment Linearizer	Converts single analog signals to 15 segments before the signals is output.	
		136*1	Temperature And Pressure Correction	Performs temperature and pressure correction.	
	Time Function	141*1	First-order Lag	Performs first-order lag operation on single analog signals.	LCB05/05D: 001 to 500 LCB03: 001 to 300 LCB01: 001 to 050
		143*1	Rate-of-change Limit	Performs rate-of-change restriction on single analog signals.	
		145*1	Moving Average	Performs moving average operation on single analog signals.	
		147*1	Lead/Delay	Performs lead/delay operation on single analog signals.	
		148*1	Dead Time	Performs dead time and first-order lagoperations on single analog signals.	
		149*1	Dead Time Compensation	Used for Smith's dead time compensation PID control	
		150	Accumulator for instantaneous value input	Accumulates analog signals, and outputs 8-digit accumulated value signals.	
		151	Run Time Accumulator	Accumulates the operating time, and outputs the pulse signal per specified time.	

Category	Type	Block Model	Block Name	Function	Allocatable Block Address
Operation Block	Time Function	153*1	Time Sequence Data Statistics	Records time sequence data from analog signals and calculates statistics, such as averages and standard deviations.	LCB05/05D: 001 to 100 LCB03: 001 to100 LCB01: 001 to 050
		155	Ramp Program	Ramp program setter for combining ramps for time and hold values.	LCB05/05D: 001 to 500 LCB03: 001 to300 LCB01: 001 to 050
		156	SegmentProgram	Segment program setter setting the output values with respect to time.	
		157	Segment Program 2	Segment program setting with wait function for setting the output values with respect to time	
	Signal Selection/ Switching	161*1	Rank Selector	Selects the rank of up to 8 analog signals.	
		162*1	Input Selector	Selects the specified analog signals specified by the contact signal from up to 8 analog signals.	
		163*1	3-input Selector	Selects and outputs one of three analog input signals.	
		164*1	3-output Selector	Outputs one analog input signal in three switched direction.	
		165*1	Constant Selector	Selects 8 preset constants by the contact signal.	
		166*11	Constant Generator	Outputs 8 independent constants.	
		167	Ramped Switch	Switches two analog inputs (or constants) with a ramp.	
		168*2	Bank Selector	Records the PID parameters (SP, P, I, D, MH, ML) in up to 8 sets in advance, and switches the PID parameter for Basic/Advanced/Blended PID Blocks according to the analog input range (zone) or input bits	
		169*2	Split Converter	Inputs the MV from the Basic PID block or Advanced PID block, converts the MV into two analog outputs for V characteristics or parallel characteristics (e.g., MV for heating or cooling) and outputs them.	
	ITEM Settings	171*1	Constant ITEM Setting	Writes the constant to the specified ITEM at the rising edge of the send command contact.	
		172*1	Variable ITEM Setting	Writes the analog signal to the specified ITEM at the rising edge of the send command contact.	
		174*1	Batch Data Collector	Stores each of max. 8 analog inputs to buffer by a certain timing within sequential processing.	
	Pulse Train Operation	182	Accumulated Value Input Adder	Adds up to four accumulated value signals.	
		183	Accumulated Value Analog Multiplier	Multiplies analog signals by the accumulated value signals.	
		184	Accumulator for accumulated value input	Converts 4-digit accumulated value signals to 8 digits.	

Category	Type	Block Model	Block Name	Function	Allocatable Block Address
Operation BlockContact Type Control Target blocks	Pulse Train Operation	185	Contact input/ Accumulated value output	Counts low-speed contact pulses, and outputs 8-digit accumulated signals.	LCB05/05D: 001 to 500 LCB03: 001 to300 LCB01: 001 to 050
		186	Accumulated Value Input/ Contact Output	Converts 4-digit accumulated value signals to low-speed contact pulses before they are output.	
	Others	192*1	Analog/Pulse Width Converter	Chenges ON/OFF duration ratio in constant cycle duration so that it is propotional to the analog signal.	
	Sequence Operation	201*1	Contact Distributor	Connect contact signals between function blocks in a 1: 1 connection.	
		202*1	Constant Comparator	Compares up to eight sets of analog signals and constants, and outputs the comparison results as contacts.	
		203*1	Variable Comparator	Compares up to eight pairs of analog signals, and outputs the comparison results as contacts.	
		205*1	Timer	2-stage output type addition timer for forecast values and reached values. Can also output the present value.	
		206*1	ON/OFF Timer	Timer for performing ON-OFF operation at preset ON and OFF times.	
		207*1	Clock Pulse	Manipulates and monitors ON/OFF valves with open/close limit switches.	
		208*1	Counter	2-stage output type addition timer for forecast values and arrival values. Can also output the current value.	
		209*1	Internal Switch	Temporary storage contact for accepting relays in the Step Ladder Program block. (Note: One internal switch is already allocated as "temporary storage" in CX-Process Tool.)	
		210*1	Level Check	Checks an analog input for 8 levels and outputs a contact corresponding to the level. The level number is also output as an analog value.	
	Contact Type Control Target	221	ON/OFF Valve Manipulator	Manipulates and monitors ON/OFF valves with open/close limit switches.	
		222	Motor Manipulator	Manipulates and monitors motor operation.	
		223	Reversible Motor Manipulator	Manipulates and monitors reversible motor operation.	
		224	Motor Opening Manipulator	Inputs a target opening, and manipulates an electric positional-proportional motor.	
		225	Switch Meter	Manipulates and monitors multiple devices (up to 8) such as ON/OFF valves, motors, and pumps.	
Sequence Control		301*1	ControlStep Ladder Program	Performs logic sequence and step progression control.	LCB01: 701 to 720 LCB03/05/05D: 701 to 900
		302*3	Sequence Table	Conditions and actions are listed in table format to perform logic sequence or step progression control. Note: CS1W-LCB05/05D only; not supported by the CS1W-LCB01.	

Category	Type	Block Model	Block Name	Function	Allocatable Block Address
Field Terminal	Contact I/OContact I/O	501*1	DI 8-point Terminal	Inputs 8 contacts from 8-point Input Unit.	901 to 980
		502*1	DI 16-point Terminal	Inputs 16 contacts from 16-point Input	
		503*1	DI 32-point Terminal	Inputs 32 contacts from 32-point Input	
		504*1	DI 64-point Terminal	Inputs 64 contacts from 64-point Input	
		511*1	DO 5-point Terminal	Outputs 5 contacts from 5-point OutputUnit.	
		512*1	DO 8-point Terminal	Outputs 8 contacts from 8-point Output Unit.	
		513*1	DO12-point Terminal	Outputs 12 contacts from 12-point Output Unit.	
		514*1	DO16-point Terminal	Outputs 16 contacts from 16-point Output Unit.	
		515*1	DO32-point Terminal	Outputs 32 contacts from 32-point Output Unit.	
		516*1	DO64-point Terminal	Outputs 64 contacts from 64-point Output Unit.	
		518*1	DI 16-point/ Do16-point Terminal	Inputs and outputs 16 contacts each from 16-point Input/16-point Output Units.	
		525*1	DI 96-point Terminal	Inputs 96 contacts from 96-contact Input Units.	
		537*1	DO 96-point Terminal	Outputs 96 contacts from 96-contact Output Units.	
		544*1	DI 48-point/ DO 48-point Terminal	Inputs and outputs 48 contacts each from 48-point Input/48-point Output Units.	

Category	Type	Block Model	Block Name	Function	Allocatable Block Address
Field Terminal	Analog I/O	551*1	AI 8-point Terminal (AD003)	Inputs 8 analog signals from the C200H-AD003.	901 to 980
		552*1	AO 8-point Terminal (DA003/4)	Inputs 8 analog signals from the C200H-DA003/DA003.	
		553*1	AI 2-point/AO 2-point Terminal (MAD01)	Inputs and outputs 2 analog signals each from the C200H-MAD01.	
		561*1 *5	AI 4-point Terminal (PTS01/02/03,PDC01, PTW01)	Inputs 4 analog signals from one of CS1W-PTS01 (Isolated-type Thermocouple Input Unit), CS1W-PTS02/03 (Isolated-type Temperature-resistance Thermometer Input Unit), CS1W-PDC01 (Isolated-type Analog Input Unit) or CS1W-PTW01 (2-lead Transmitter Input Unit).	
		562*1 *5	PI 4-point Terminal (PPS01)	Inputs 4 instantaneous values and accumulated values each from CS1W-PPS01 (Isolated-type Pulse Input Unit).	
		563*1 *5	AO 4-point Terminal (PMV01)	Outputs 4 analog signals from CS1W-PMV01 (Isolated-type Control Output Unit).	
		564*1 *5	AI 8-point Terminal (PTR01/02)	Inputs 8 analog signals from CS1W-PTR01 (Power Transducer Input Unit) or CS1W-PTR02 (Analog Input Unit (100 mV)).	
		565*1 *5	AO 4-point Terminal (PMV02)	Outputs 4 analog signals from CS1W-PMV02 (Isolated-type Control Output Unit).	
		566*4	AI 4-point Terminal (PTS51)	Inputs 4 analog signals from CS1W-PTS51 or CJ1W-PTS51 (Isolated-type Thermocouple Input Unit).	
		567*4	AI 4-point Terminal (PTS52)	Inputs 4 analog signals from CS1W-PTS52 or CJ1W-PTS52 (Isolated-type Thermocouple Input Unit).	
		568*4 *5	AI 8-point Terminal (PTS55)	Inputs 8 analog signals from CS1W-PTS55 (Isolated-type Thermocouple Input Unit).	
		569*4 *5	AI 8-point Terminal (PTS56)	Inputs 8 analog signals from CS1W-PTS56 (Isolated-type Thermocouple Input Unit).	
		570*4 *5	AI 8-point Terminal (PDC55)	Inputs 8 analog signals from CS1W-PDC55 (Direct current Input Unit).	
		571*7	AI 2-point Terminal (PTS15/16, PDC15)	Inputs 2 analog signals from the CS1W-PTS15, CS1W-PTS16, or CS1W-PDC15.	
		582*7	AI 16-point Terminal (AD161)	Inputs 16 analog signals from the CS1W-AD16.	
	Analog I/O	583*1 *5	AI 4-point/AO4-point Terminal (MAD44)	Inputs and outputs 4 analog signals each from the CS1W-MAD44.	
		584*1	AI 8-point Terminal (AD081)	Inputs 8 analog signals from the CS1W-AD081(-V) or CJ1W-AD081(-V)	
		585*1	AO 8-pointTerminal (DA08V/C)	Outputs 8 analog signals from the CS1W-DA08V/DA08C or CJ1W-DA08V/DA08C	
		586*1	AI 4-point Terminal (AD041)	Inputs 4 analog signals from the CS1W-AD041(-V1) or CJ1W-AD041(-V1)	
		587*1	AO 4-point Terminal (DA041)	Outputs 4 analog signals from theCS1W-DA041 or CJ1W-DA041	

Category	Type	Block Model	Block Name	Function	Allocatable Block Address
Field Terminal	Analog I/O	588*1	AI 4-point Terminal (DRT1-AD04)	Inputs four analog signals from a DRT1-AD04 DeviceNet Slave Analog Input Unit.	901 to 980
		589*1	AO 2-point Terminal (DRT1-DA02)	Outputs two analog signals from a DRT1-DA02 DeviceNet Slave Analog Output Unit	
		591*4 *6	AO 2-point Terminal (DA021)	Outputs 2 analog signals from the CJ1W-DA021.	
		592*4 *6	AI 4-point/AO2-point Terminal (MAD42)	Inputs 4 analog signals and outputs 2 analog signals each from the the CJ1W-MAD42.	

SECTION 4
Application Cases

4-1 Cascade Control 4-1
4-2 Split Control 4-7
4-3 Position-propotional Control (Motor Opening Manipulator) 4-11
4-4 Process Control with Dead Band (Sample PI Control) 4-14
4-5 Proccess Control with Dead Band (Smith Dead Time Compensation Control) 4-17
4-6 Temperature and Pressure Correction (Vortex Flowmeter) 4-20
4-7 Temperature and Pressure Correction (Differential Pressure Flowmeter) 4-24
4-8 Temperature and Pressure Correction (Variable Area Flowmeter) 4-27
4-9 Average Temperature Control for Constant Temperature Bath (With bias for input and output)4-30
4-10 Average Temperature Control for Constant Temperature Bath 4-34
4-11 Calorie Control of Mixed Gas 4-38
4-12 Neutralizing of Acid Discharged Water 4-42
4-13 Arithmetic Operation (Addition or Subtraction) 4-45
4-14 Arithmetic Operation (Division) 4-48
4-15 Arithmetic Operation (Multiplication) 4-51
4-16 Arithmetic Operation (Average Value) 4-54
4-17 Time-proportional Output Controller 4-57
4-18 Neutralization Control (Acid and Alkali Control) 4-59
4-19 Electric Valve Control by Electric Positionner 4-63
4-20 Dead Band Control (With Deviation Alarm) 4-64
4-21 Flow Rate Control 4-66

4-1 Cascade Control

Objective	Improves control of a process which is largely affected by disturbance
Process	

Process Flow

In this example, the heating medium flow rate is controlled to keep the heat exchanger outlet temperature constant. Disturbance generated in the secondary loop (heating medium) is compensated within the secondary loop and PV (outlet temperature) of the primary loop is not influenced.

[Bumpless Switching]
In case that the secondary loop controller is switched from LOCAL operation to REMOTE operation when difference between primary loop MV and secondary loop LSP is large, SP is suddenly changed and manipulation output is largely swung by proportional action.
For LCB, set Bumplsee output between primary/secondary loops (ITEM032) to “Used”. Then the LCB sets the primary controller to MAN and its MV is controlled to be same as LSP of secondary loop controller when secondary loop controller is in LOCAL operation. In case that secondary controller is in REMOTE operation, primary controller is switched to AUTO and PID operation result of the primary loop controller is input to the RSP of secondary loop controller.
This function will curb the sudden change of SP caused by LOCAL to REMOTE or REMOTE to LOCAL switching.

[PV derivative type PID and Deviation derivative type-PID control]
If derivative operation works effectively for deviation, the output is largely swung when the LSP is changed due to derivative operation. To prevent this, PV derivative type PID is utilized to operate derivative operation for only PV and integral operation for deviation.
For Cascade secondary loop controller, derivative operation does not work against RSP change in PV derivative type PID; therefore, utilize Deviation derivative type-PID control.
For the LCB, set the two degree of freedom PID parameters ITEM065 and ITEM066 to select optimum algorism, such as PV derivative type PID and Deviation derivative type-PID control.

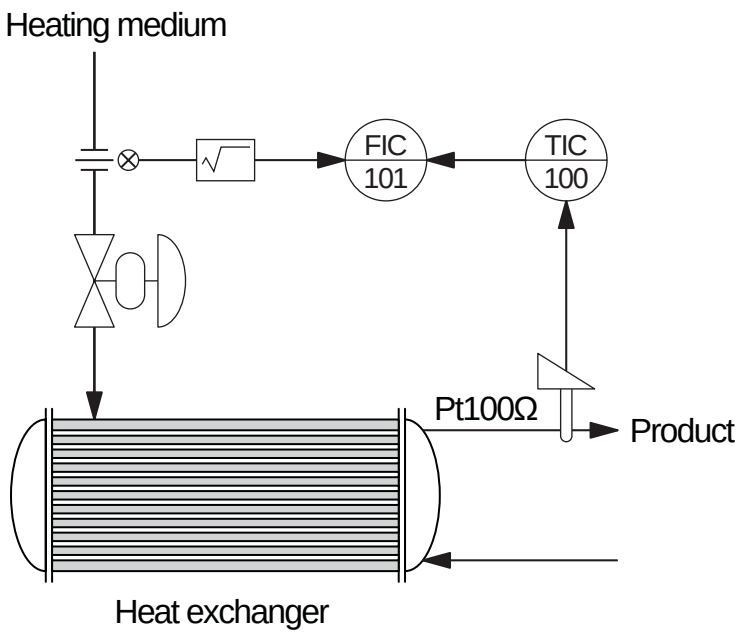

Description

1)

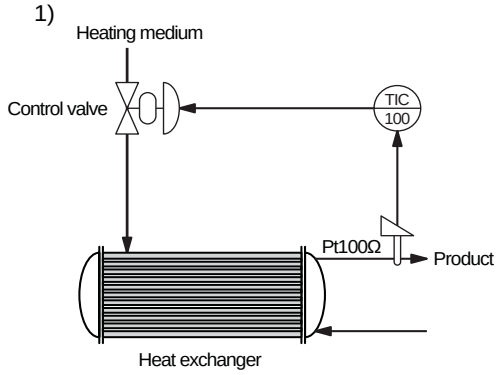

1) Control Without Cascade
The loop in this example controls the supply of heating medium to keep the product outlet temperature of the heat exchanger at a certain degree.
In case that the control is stable and the source pressure of heat medium becomes high, differential pressure at the control valve becomes large and flow rate of heating medium is increased. The temperature at the temperature sensor changes after a dead time calculated with the time constant of heat exchanger has passed, which causes temperature deviation on the controller. The controller corrects the flow rate and control valve is controlled to decrease output.
In this loop, too much heat medium is continuously supplied due to the dead time until the flow rate is corrected. Therefore, deviation in product temperature will be large.

2)

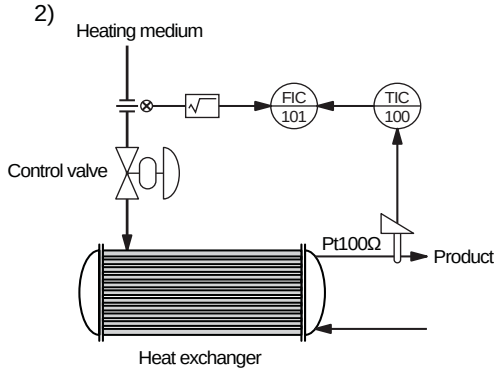

2) Temperature – Flow rate cascade
Heating medium flow rate control loop (secondary loop) is added. The MV of temperature controller (primary loop) is connected to the SP of the flow rate controller.
Flow rate increase caused by increase of heating medium source pressure (secondary loop disturbance) is detected and corrected by the flow rate controller. The response of flow rate loop is fast; therefore, flow rate is corrected before influence from the change in source pressure is seen in the primary loop and stable temperature control can be achieved.
In case that heating medium temperature changes (primary loop disturbance), the secondary loop can not detect it; therefore, it is not possible to improve control performance by cascade control.

3)

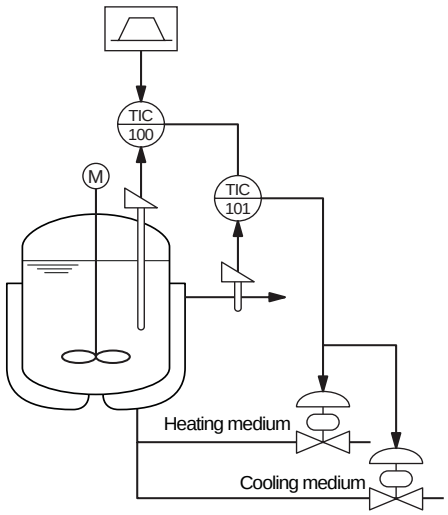

3) Temperature - Temperature Cascade
This is an example of cascade loop which is utilized for polymerization reaction processes.
The primary loop controls inner temperature of reactor tank and secondary loop controls jacket outlet temperature. When the operation is started, heating medium is provided to start the reaction. When the reaction starts, reaction heat is removed with cooling medium to control the temperature in the tank.
This cascade loop is effective if jacket temperature is corrected before temperature in the tank changes being influenced by the change in temperature and pressure of secondary loop heating/cooling medium. However, both primary and secondary loops control temperature; therefore, there is not significant difference in their response time. Therefore, it is not so effective for improving controllability compared with Temperature – Flow rate cascade.

4) Conclusion
Cascade control is effective to improve controllability against disturbance of the secondary loop. However, it has little effect to the primary loop disturbance.
Cascade control is effective to improve controllability when the response difference between the primary and secondary loops are large.

Connection Diagram

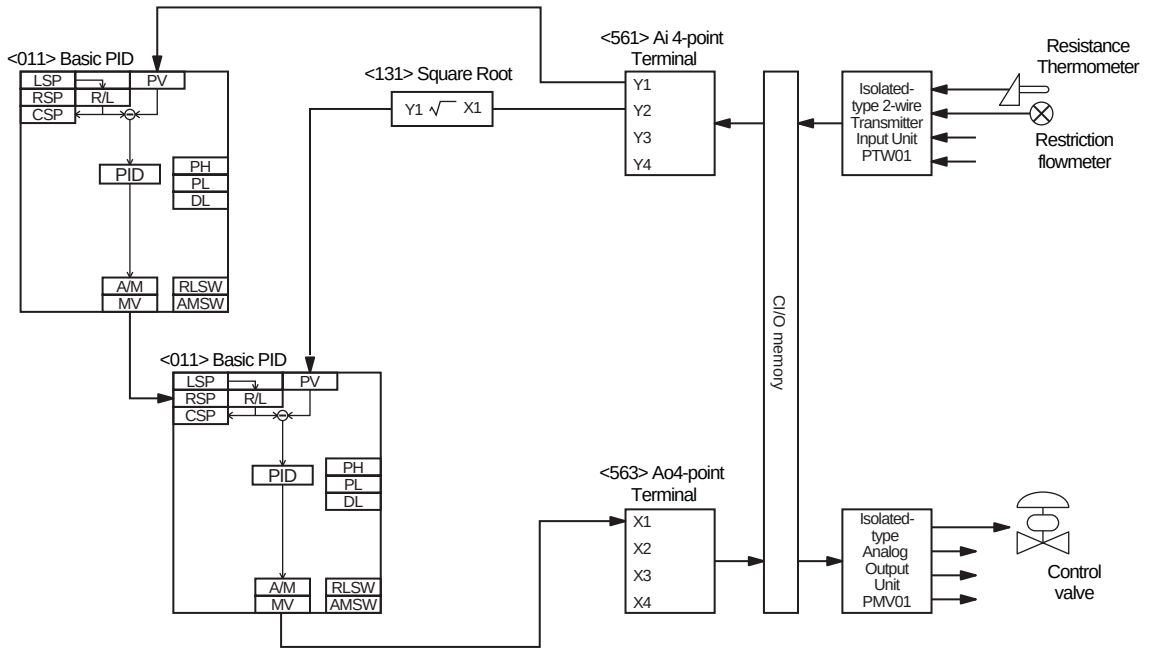

NOTE: No. < >of the Field Terminal is block model of the LCB (CS1W-LCB01/05).

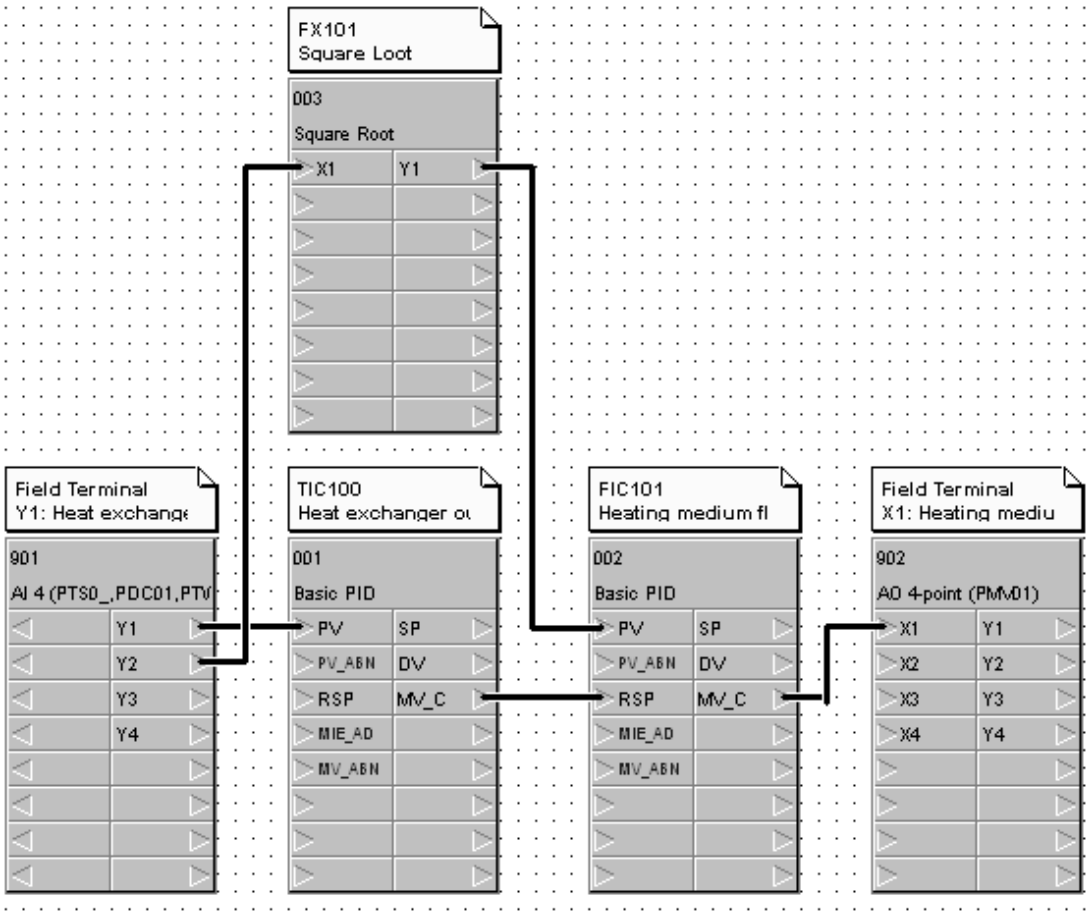

Primary Loop Monitor	Secondary Loop Monitor
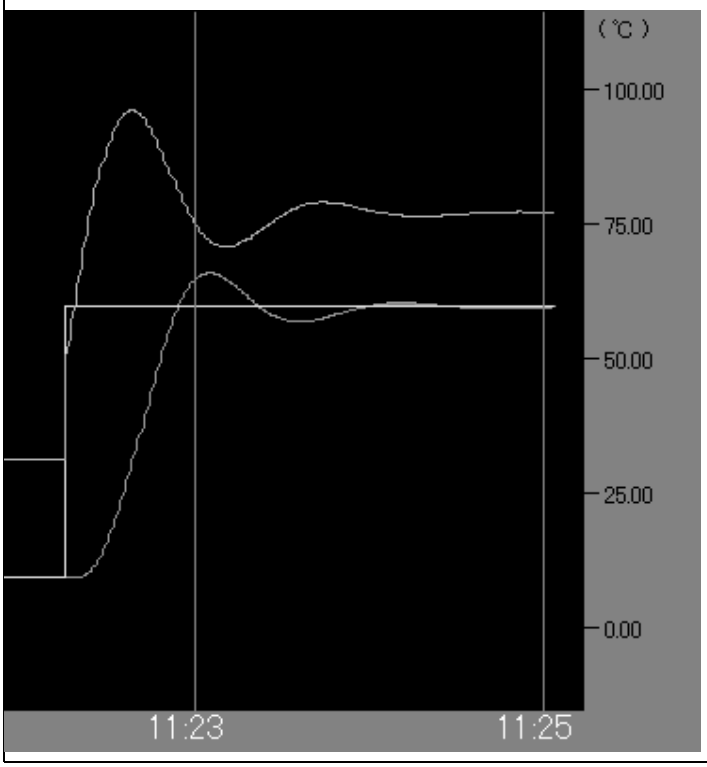	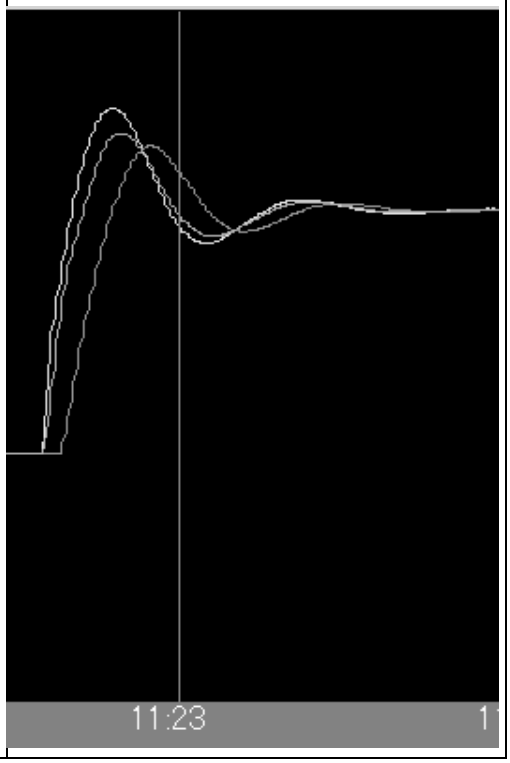

◆Setting Example

ITEM list (Cascade Control)

Block address	Block Model	Block Name	ITEM	Comment	Data	Settings
000	<000>	System Common Block	004	System common operation cycle	1	0.1sec
			018	START mode at power ON	1	Hot Start
001	<011>	Basic PID	004	Operation cycle	1	0.1sec
			024	Set Point setting mode	0	Local only
			052	Control action	0	Reverse
002	<011>	Basic PID	004	Operation cycle	1	0.1sec
			024	Set Point setting mode	1	Remote/Local
			032	Bumpless output between primary/secondary loops	1	Used
			052	Control action	0	Reverse
003	<131>	Square Root	004	Operation cycle	1	0.1sec
			009	Gain K1	1.000	
			010	Input low-end cutout setting	1.00	
901	<561>	AI4-point Terminal	004	Operation cycle	1	0.1sec
			007	Unit number	01	
			010	Common or Y1 input range conversion	1	0-4000
902	<563>	AO4-point Terminal	004	Operation cycle	1	0.1sec
			007	Unit number	02	

CSV Tag list (Cascade Control)

Block address	Block Model	Block Name	Tag Name	Tag Comment	Scaling upper limit	Scaling lower limit	Decimal point position	Unit
001	<011>	Basic PID	TIC100	Heat exchanger outlet temperature	10000	0	2	°C
002	<011>	Basic PID	FIC101	Heat medium flow rate	5000	0	2	kg/h
003	<131>	Square Root	FX101	Square Root	-	-	-	-

◆Improvement

Primary Loop Disturbance (30%)	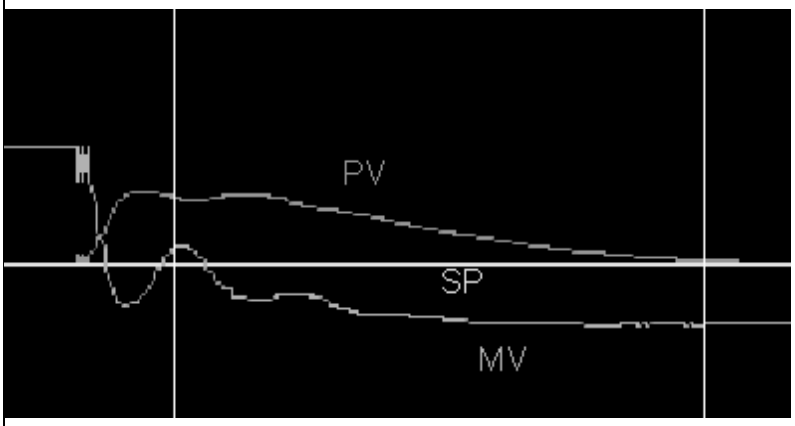
Secondary Loop Disturbance (30%)	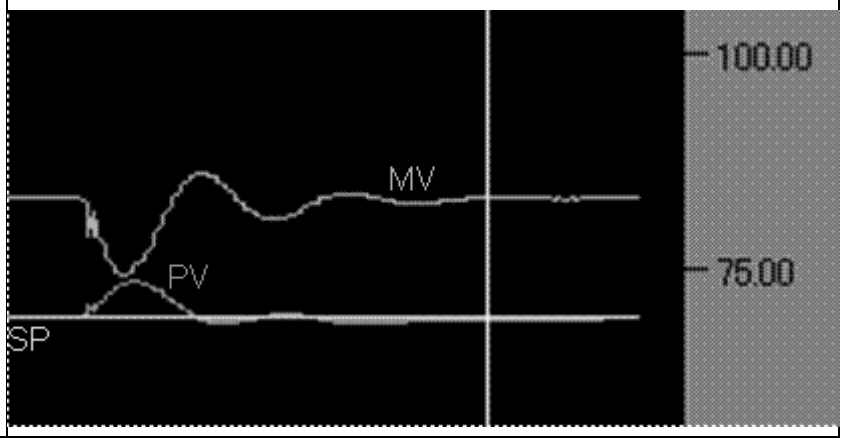

4-2 Split Control

Objective	Controls multiple objects by one controller output
Process	Heating/Cooling, Pressurization/Depressurization, Humidification/Dehumidification, and Acid/Alkali Process

Process Flow

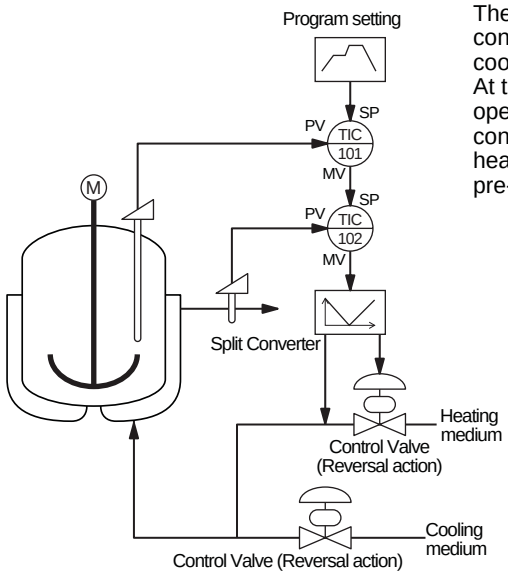

The Split Converter block is utilized in combination with Basic PID or Advanced PID block.
The figure shows an example of Batch reaction in which MV of the control block is converted into manipulation output of heating and cooling medium .
At the beginning of reaction, control valve of heating medium is operated to accelerate the reaction. After reaction is started, control valve of cooling medium is operated to remove reaction heat to execute temperature control according to the pre-registered temperature program.

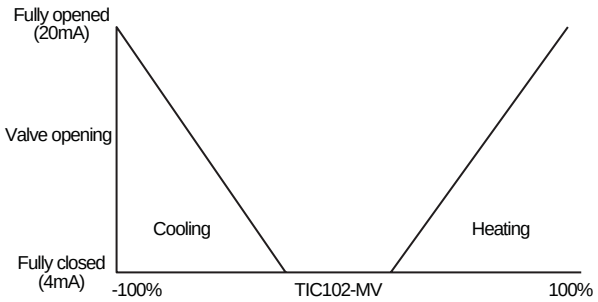

Description	The Split Controller is built by combining Split Converter block and Basic PID or Advanced PID control block. The characteristic lines of heating and cooling can be overlapped, or gap can be set between them. Reversal characteristic lines can be obtained for both heating and cooling depending on the control object characteristics. The heating and cooling controls have separate PID parameters which can be auto-tuned. The high/low limit can be set for manipulated value for both heating and cooling. (Set “-105.00%” for the PID block lower limit, or set “1” to the ITEM030 (Write PID block MV high/low limits bit) of Split Converter block). - Operation of Control Valve - The MV output of the controller is 4 to 20mA. In a V-characteristics of the control valve positionner, the control valve for cooling fully opens at 4mA and completely closes at 12mA (Air Less Open). When Split Converter block is entered, the control valves for both cooling and heating completely closes at 4mA and fully opens at 20mA, according to the MV signal (0 to 100%). (Air Less Close)

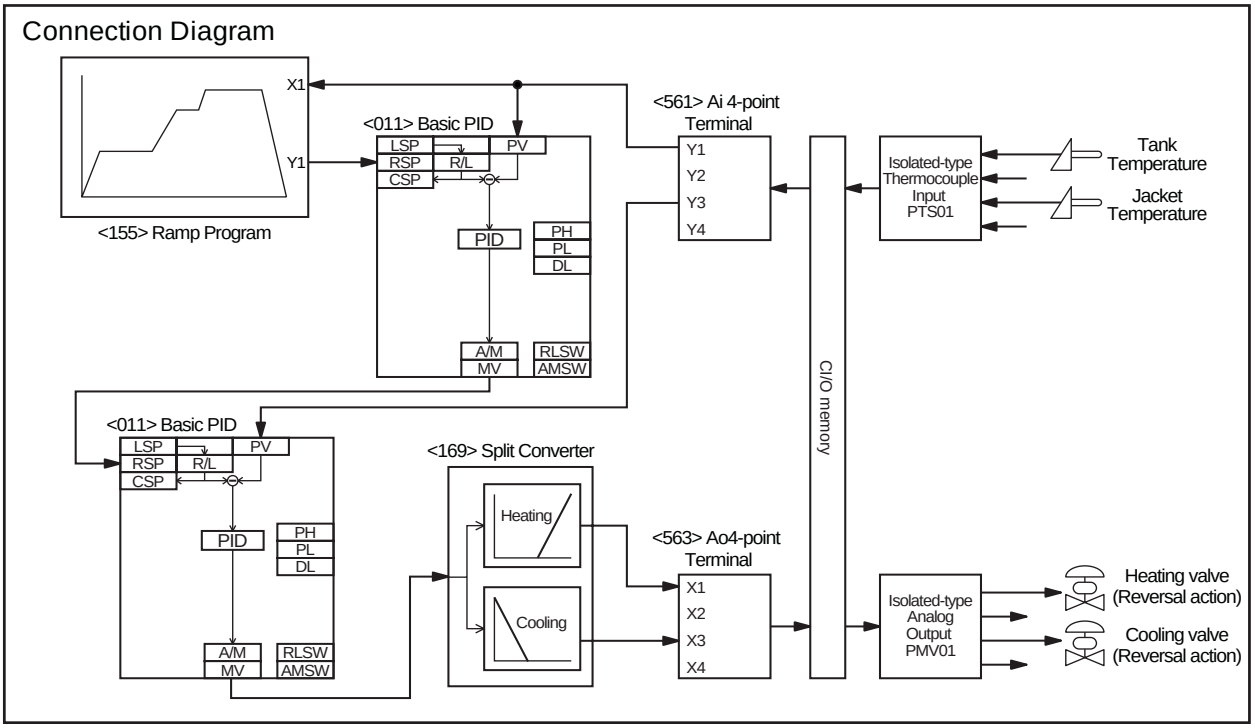

NOTE: No. < >of the Field Terminal is block model of the LCB (CS1W-LCB01/05).

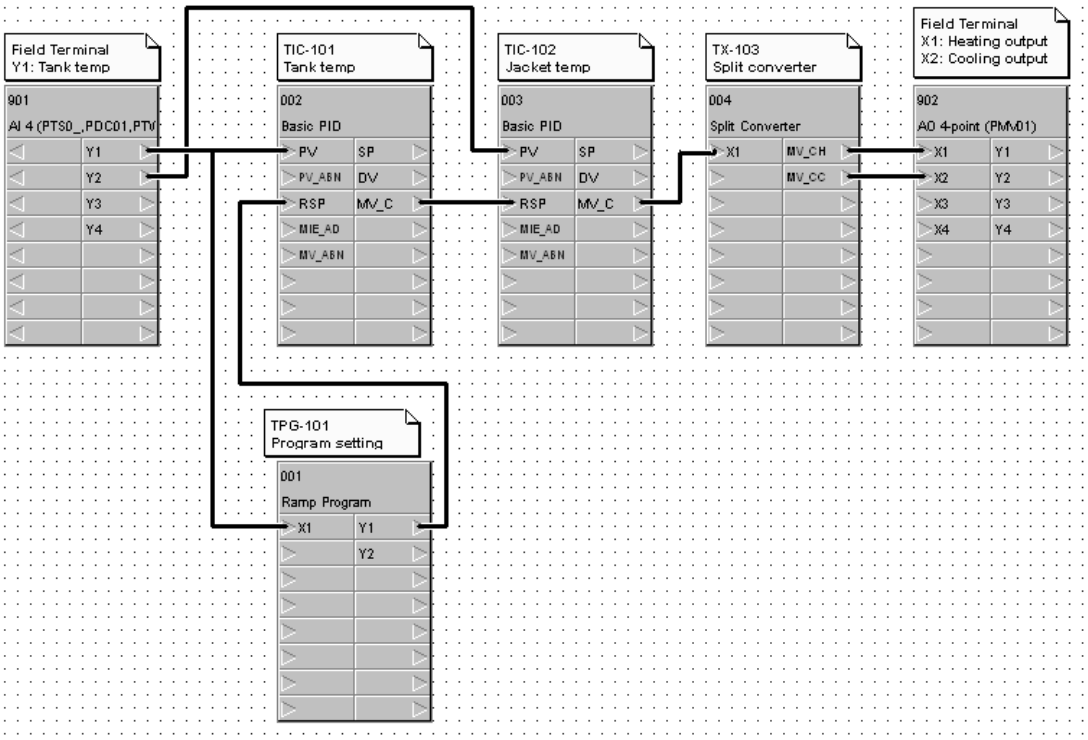

ITEM list (Split Control)

Block address	Block model	Block Name	ITEM	Comment	Data	Settings
000	<000>	System Common Block	004	System common operation cycle	1	0.1sec
			018	START mode at power ON	1	Hot Start
001	<155>	Ramp pogram	004	Operation cycle	1	0.1sec
002	<011>	Basic PID	004	Operation cycle	1	0.1sec
			024	Set Point setting mode	1	Remote/Local
			052	Control action	0	Reverse
003	<011>	Basic PID	004	Operation cycle	1	0.1sec
			024	Set Point setting mode	1	Remote/Local
			032	Bumpless output between primary/secondary loops	1	Used
			052	Control action	0	Reverse
			077	Low MV limit	-105.00	%
004	<169>	Split converter	004	Operation cycle	1	0.1sec
			010	Reverse heating MV	0	Do not reverse
			011	Reverse cooling MV	0	Do not reverse
			022	Dead band	0.00	%
			040	PID block PID parameters write bit	0	Do not write
			041	AT results copy bit	0	Do not write
			042	PID parameter switching hysteresis value	5.00	%
			045	Heating system P		
			046	Heating system I		
			047	Heating system D		
			048	Cooling system P		
			049	Cooling system I		
			050	Cooling system D		
901	<561>	AI4-point Terminal	004	Operation cycle	1	0.1sec
			007	Unit number	00	Input unit number
			010	Common or Y input range conversion	1	0-4000
902	<563>	AO4-point Terminal	004	Operation cycle	1	0.1sec
			007	Unit number	01	Output unit number

CSV Tag list (Split Control)

Block address	Block Model	Block Name	Tag Name	Tag Comment	Scaling upper limit	Scaling lower limit	Decimal point position	Unit
001	<155>	Ramp pogram	TPG-101	Ramp pogram	-	-	-	-
002	<011>	Basic PID	TIC-101	Tank temperature controller	3000	0	1	°C
003	<011>	Basic PID	TIC-102	Jacket temperature controller	3000	0	1	°C
004	<169>	Split converter	TX-103	Split Converter	-	-	-	-

4-3 Position-propotional Control (Motor Opening Manipulator)

Objective	Controls electric reversible revolution control object
Process	The pulse width output controller can be used for electric valve operation.

Process Flow

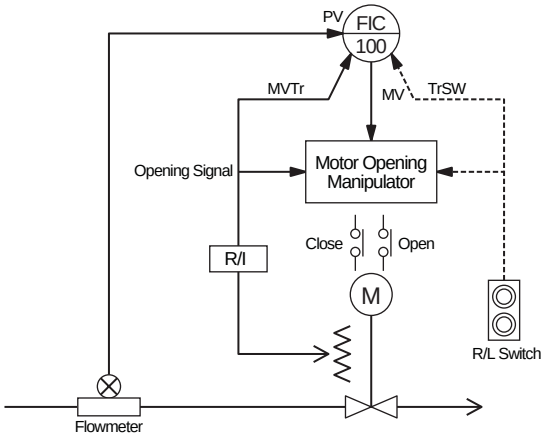

The pulse width output controller converts controller's MV signal into contact signals for Opening/Closing and controls contact output pulse width depending on the deviation between MV and opening signal.

Opening/Closing period = Full-stroke time (ITEM15) X Opening Deviation

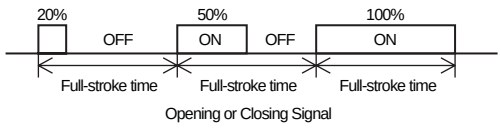

Description	When the deviation between MV (X2) of the PID Controller and Opening Input (X1) is larger than the Dead-band (ITEM17), Opening Manipulation Output (U1) or Closing Manipulation Output (U2) is turned ON. In case that the deviation is smaller than the Dead-band (ITEM17), both outputs are turned OFF. Time of opening/closing is determined by the following: Full-stroke time (ITEM15) x Opening deviation. In order to compensate backlash (lost time caused by mechanical hysteresis of control object when rotation direction is switched), specify Hysteresis setting (ITEM35). In case that both Opening and Closing output become "0" to switch rotation direction, manipulation output is controlled to be "0" during Restart control time (ITEM16) to protect the motor. To avoid sudden change when switching the location of operation by Remote/Local settings, input R/L signal to the TrSW of the controller and Opening signal to the MVTr.

Connection Diagram

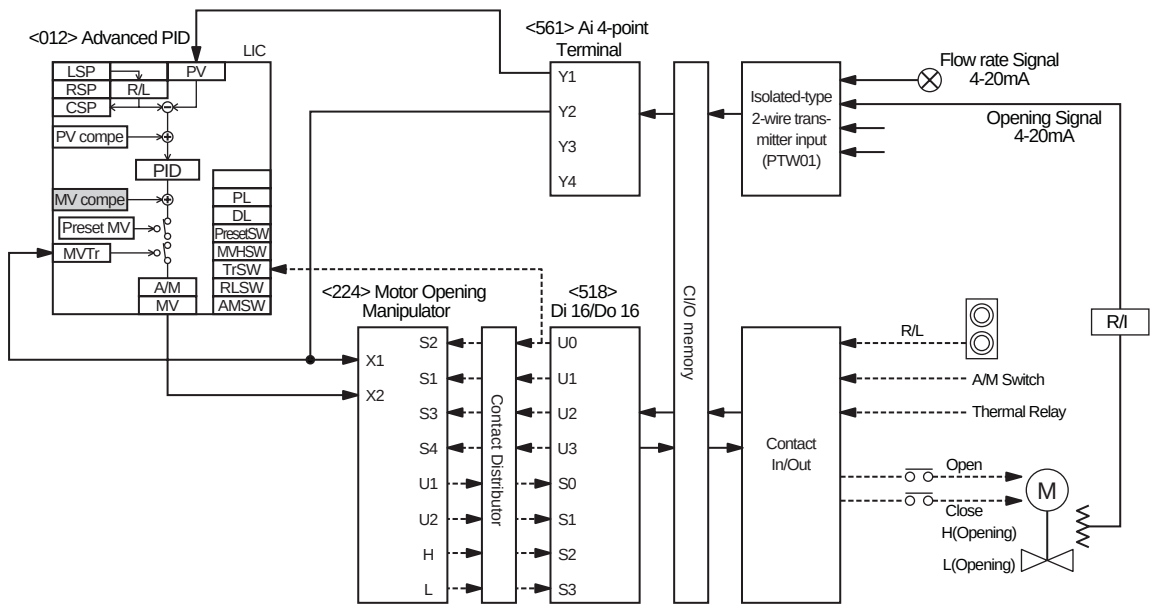

NOTE: No. < >of the Field Terminal is block model of the LCB (CS1W-LCB01/05).

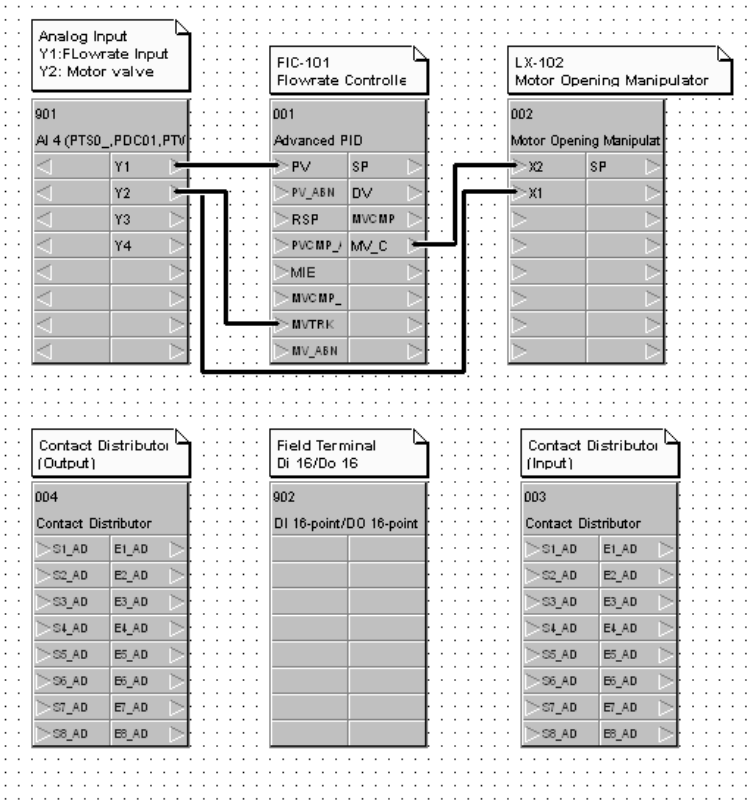

ITEM list (Pulse width controller)

Block address	Block Model	Block Name	ITEM	Comment	Data	Settings
000	<000>	System Common Block	004	System common operation cycle	1	0.1sec
			018	START mode at power ON	1	Hot Start
001	<012>	Advanced PID	004	Operation cycle	1	0.1sec
			024	Set Point setting mode	0	Local only
			052	Control action	0	Reverse
002	<224>	Motor Openig Manipulator	004	Operation cycle	1	0.1sec
			015	Full-stroke time		0-999.9sec
			016	Restart control time		0-999.9sec
			017	Dead-band		0-320.00%
			035	Hysteresis setting		0-320.00%
003	<201>	Contact Distributor	004	Operation cycle	1	0.1sec
			006	Output time	0	Constant output
004	<201>	Contact Distributor	004	Operation cycle	1	0.1sec
			006	Output time	0	Constant output
901	<561>	AI4-point Terminal	004	Operation cycle	1	0.1sec
			007	Unit number	00	
			010	Common or Y input range conversion	1	0-4000
902	<518>	DI16-point/DO-16-point Terminal	004	Operation cycle	1	0.1sec
			007	CIO word No.	0000	

CSV Tag list (Pulse width controller)

Block address	Block Model	Block Name	Tag Name	Tag Comment	Scaling upper limit	Scaling lower limit	Decimal point position	Unit
001	<012>	Advanced PID	FIC-100	Flow rate controller	5000	0	2	m3/h
002	<224>	Motor Openig Manipulator	FX-100	Motor Opening Manipulator	-	-	-	-

4-4 Process Control with Dead Band (Sample PI Control)

Objective	Builds Sample PI Control which is suitable for a process with long dead time.
Process	

Process Flow

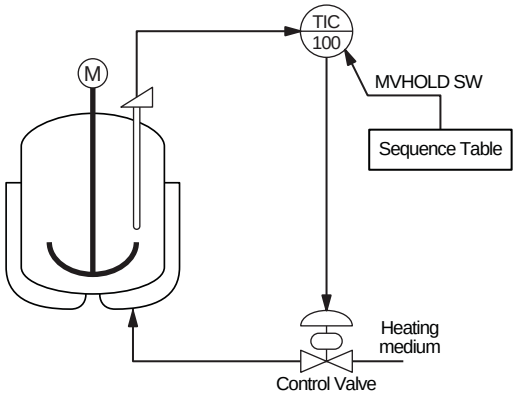

In the Sample PI Control operation, control operation is proceeded after result of previous control operation is adequately obtained.

<Sample PI Control>

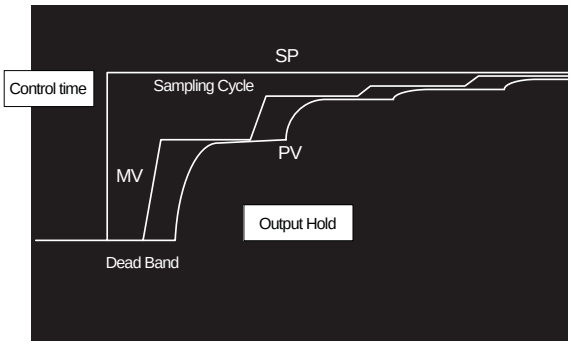

Description	The Sample PI Control operation performs PI control while in control time every sampling cycle, and holds control output for the last moment, when AUT or CAS is selected. Sampling cycle and control time can be determined by the following: 1) Sampling cycle= Dead time + Delay time constant x (2 to 3) 2) Control time = Sampling cycle/10 When Tn (minimum cycle of major disturbance for the process) is shorter than the Sampling cycle, control cannot be executed. Therefore, determine the Sampling cycle by using the following: 3) Sampling cycle ≦ Tn/5

Connection Diagram

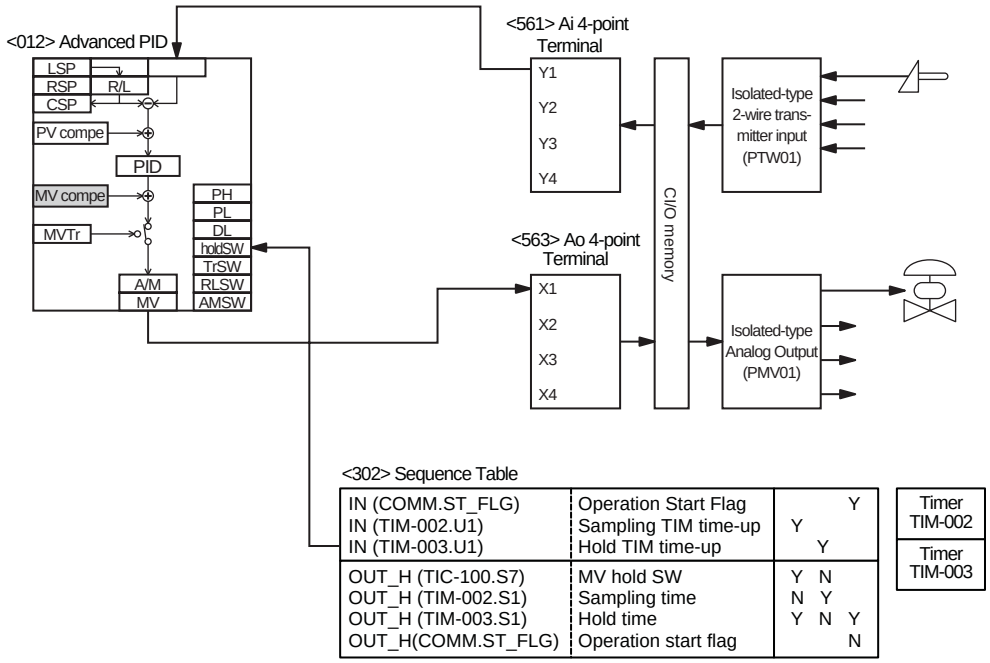

<302> Sequence Table

IN (COMM.ST_FLG)	Operation Start Flag	Y	Timer TIM-002
IN (TIM-002.U1)	Sampling TIM time-up	Y	
IN (TIM-003.U1)	Hold TIM time-up	Y	Timer TIM-003
OUT_H (TIC-100.S7)	MV hold SW	Y N	
OUT_H (TIM-002.S1)	Sampling time	N Y	
OUT_H (TIM-003.S1)	Hold time	Y N Y	
OUT_H(COMM.ST_FLG)	Operation start flag	N	

NOTE: No. < >of the Field Terminal is block model of the LCB (CS1W-LCB01/05).

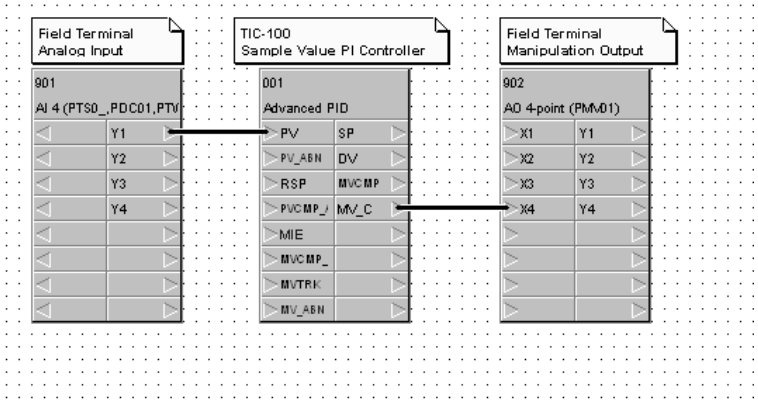

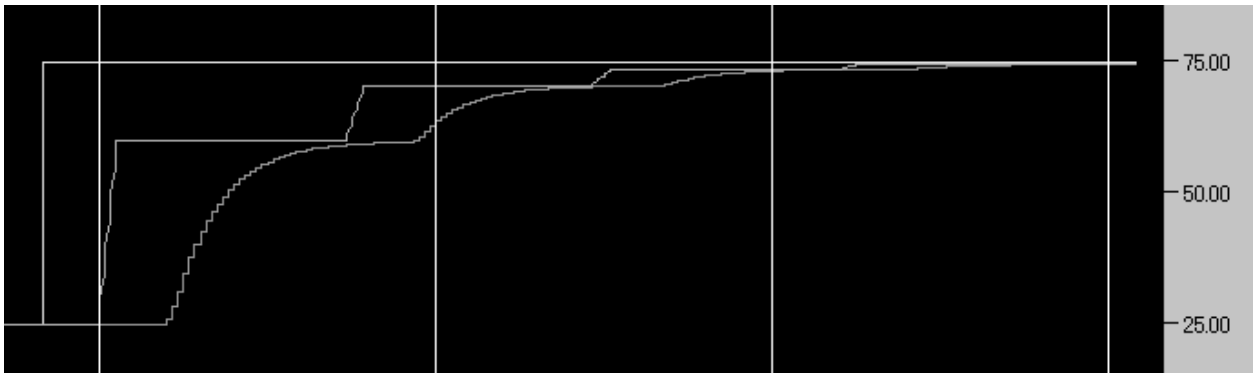

ITEM list (Sample PI control)

Block address	Block Model	Block Name	ITEM	Comment	Data	Settings
000	<000>	System Common Block	004	System common operation cycle	1	0.1sec
			018	START mode at power ON	1	Hot Start
001	<012>	Advanced PID	004	Operation cycle	1	0.1sec
			024	Set Point setting mode	0	Local only
			052	Control action	0	Reverse
002	<205>	Timer	004	Operation cycle	1	0.1sec
			007	Setting	8	sec (Control time)
003	<205>	Timer	004	Operation cycle	1	0.1sec
			007	Setting	80	sec (Hold time)
701	<302>	Sequence Table	004	Operation cycle	1	0.1sec
			006	Block start mode	0	Start at all times
901	<561>	AI4-point Terminal	004	Operation cycle	1	0.1sec
			007	Unit number	00	Input unit number
			010	Common or Y input range conversion	1	0-4000
902	<563>	AO4-point Terminal	004	Operation cycle	1	0.1sec
			007	Unit number	01	Output unit number

Sequence Table		Execution Form Every Cycle	Rule No.	01 02 03 04
No.	Signal	Comment	Step No.	00
001	IN(Not set..FAIL)	Operation start flag		Y
002	IN(Tag002.U1)	Arival at setting		Y
003	IN(Tag003.U1)	Arrival at setting		Y
004				
001	OUT_H(Tag001.S7)	MV hold switch		Y N
002				
003				
004				
005	OUT_H(Tag002.S1)	Count switch		N Y
006	OUT_H(Tag003.S1)	Count switch		Y N Y
007	OUT_H(Not set..ST_FLG)	Run Start flag		N
008				

CSV Tag list (Sample PI control)

Block address	Block Model	Block Name	Tag Name	Tag Comment	Scaling upper limit	Scaling lower limit	Decimal point position	Unit
001	<012>	Advanced PID	TIC-100	Sample PI	10000	0	2	°C
002	<205>	Timer	TIM-002	Control time	-	-	-	-
003	<205>	Timer	TIM-003	Hold time	-	-	-	-

4-5 Proccess Control with Dead Band (Smith Dead Time Compensation Control)

Objective	Control method which is suitable for the process with long dead time
Process	

Process Flow

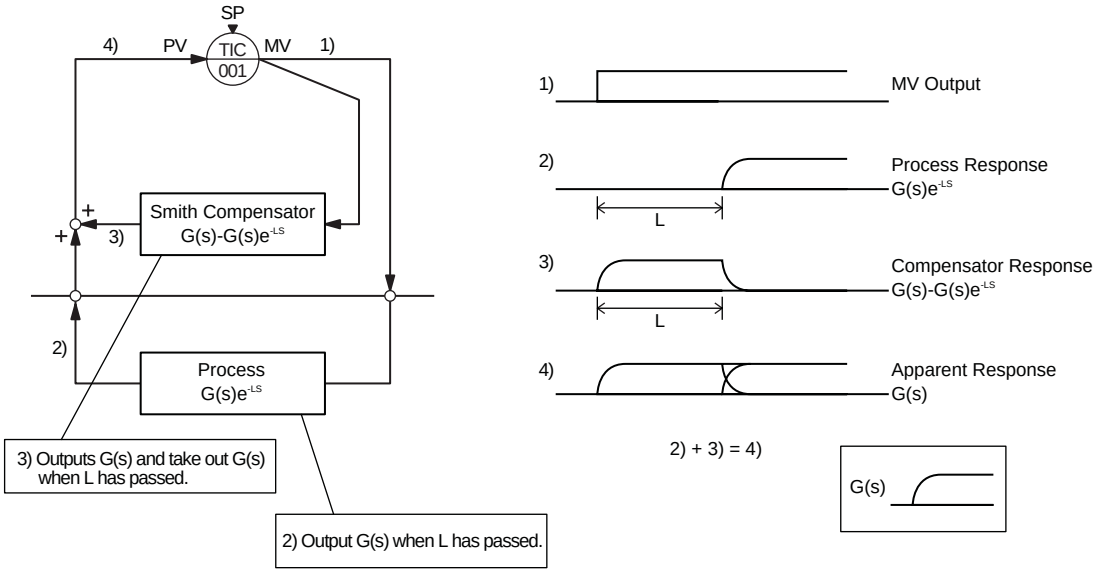

Description	The PID controller outputs MV to the Process and continuously executes PID operation until deviation between the PV and SP is eliminated, correcting MV value. In case that dead time of the Process is long, the PID controller recognizes that it is because output correction is not enough and increases the correction value. However, when the Process receives its response after dead time has passed, the correction turns out to be excess correction. The controller executes correction in reversal direction. This series of operation written above is repeatedly performed, resulting in large hunting of PV. Based on the amount of change in MV, Smith dead time compensation control calculates virtual response signal to add it to the actual response signal. This enables the Process to achieve response without dead time, apparently. This control method can not be employed for a process in

Connection Diagram

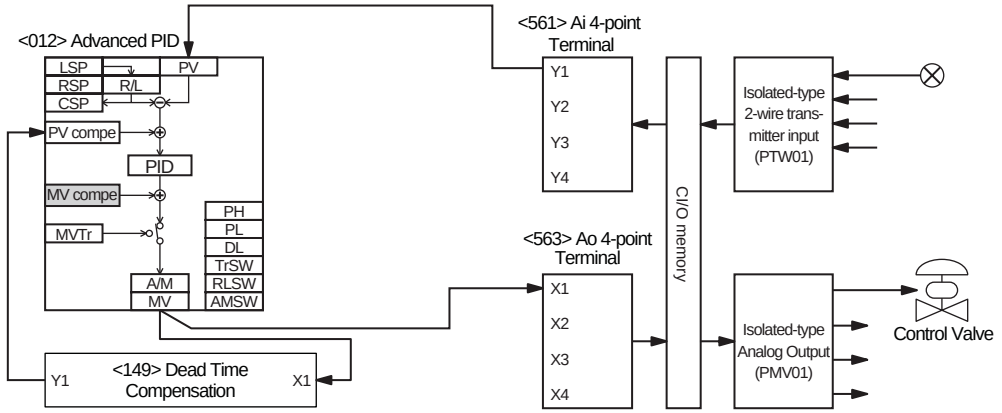

NOTE: No. < >of the Field Terminal is block model of the LCB (CS1W-LCB01/05).

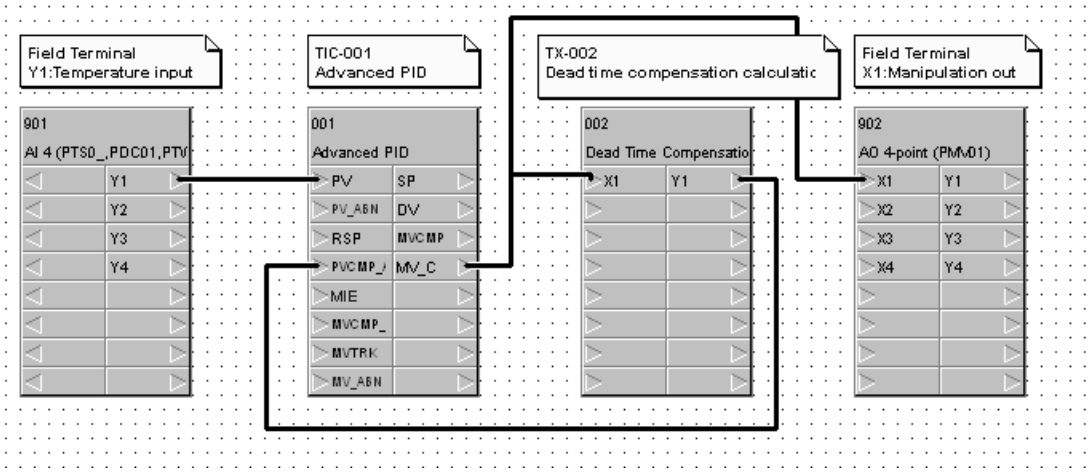

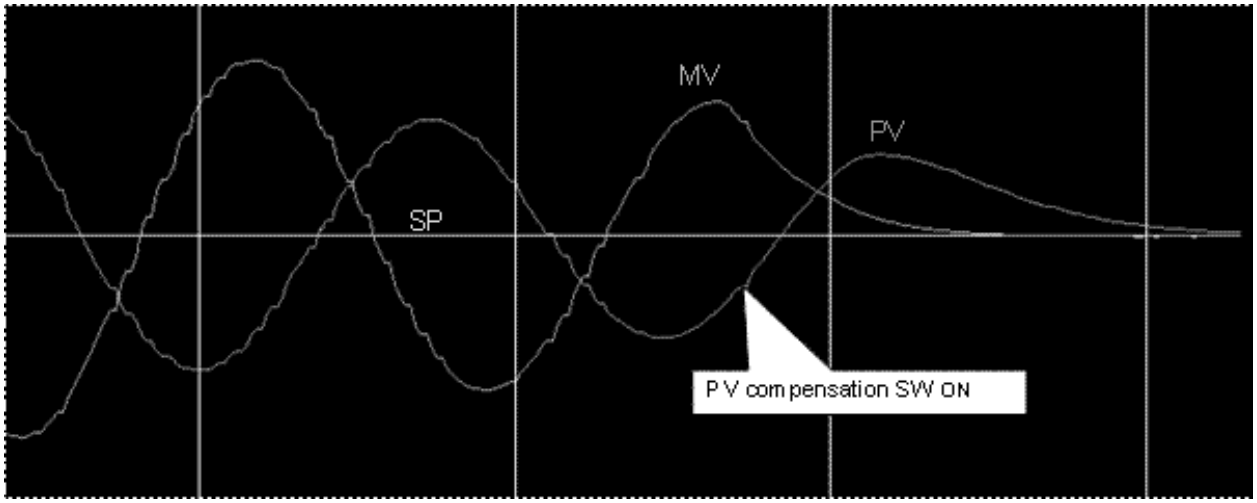

ITEM list (Smith dead time compensation)

Block address	Block Model	Block Name	ITEM	Comment	Data	Settings
000	<000>	System Common Block	004	System common operation cycle	1	0.1sec
			018	START mode at power ON	1	Hot Start
001	<012>	Advanced PID	004	Operation cycle	1	0.1sec
			024	Set Point setting mode	0	Local only
			045	PV compensation mode	1	Addition
			046	PV compensation ON/OFF switch	1	0:OFF, 1:ON
			052	Control action	0	Reverse
002	<149>	Dead Time Compensation	004	Operation cycle	1	0.1sec
			009	Gain	1.000	
			010	Time constant	15.0	sec
			011	Sampling cycle	1	sec
			012	Number of samples	20	
901	<561>	AI4-point Terminal	004	Operation cycle	1	0.1sec
			007	Unit number	00	Input unit number
			010	Common or Y input range conversion	1	0-4000
902	<563>	AO4-point Terminal	004	Operation cycle	1	0.1sec
			007	Unit number	01	Output unit number

CSV Tag list (Smith dead time compensation)

Block address	Block Model	Block Name	Tag Name	Tag Comment	Scaling upper limit	Scaling lower limit	Decimal point position	Unit
001	<012>	Advanced PID	TIC-100	Smith dead time compensation	10000	0	2	°C
002	<149>	Dead Time Compensation	TX-002	Dead time compensation	-	-	-	-

4-6 Temperature and Pressure Correction (Vortex Flowmeter)

Objective	Controls multiple objects by one controller output
Process	Utilizes vortex flowmeter to measure gas flow rate in a process in which fluid temperature and pressure fluctuate.

Process Flow

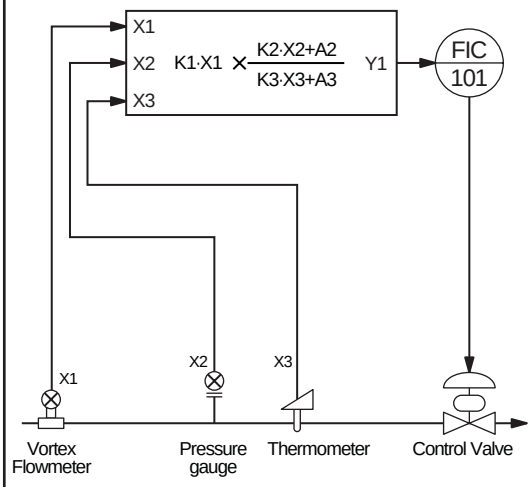

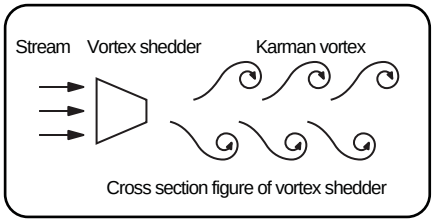

The vortex flowmeter calculates flow rate by measuring frequency of vortex. The flowmeter is designed based on the principle that Frequency of Karman vortex generated by the columnar object which is installed vertically to the flow is proportional to the flow rate. The flow rate is expressed by the following expression:

$$f = St\nu/d$$

f : Votex frequency
St : Strouhal number
ν : Flow rate
d : Columnar object width

The Strouhal number is considered as a constant within the defined range of Reynolds Number. Therefore, Vortex frequency (f) is proportional to the Flowrate (ν). To calculate the Volume flow rate, multiply it with duct cross section area.

There is no influence of fluid temperature and pressure on vortex frequency. However, in case that temperature and pressure changes because measured flow rate is volume flow rate, it is necessary to correct the flow rate into the value in normal condition.

< Pressure correction operation example >
Where Pressure span: 0 to 0.5MPaG and Standard Pressue: 0.3MPaG, (atmospheric pressure: 0.1013MPa), (X2: Pressure signal 0 to 1.0)

$$\frac{\text{Pressure Span}}{\text{Standard Pressure}} \times \text{Pressure Signal} + \frac{\text{0\% Pressure}}{\text{Standard Pressure}}$$

$$\frac{0.5}{0.3+0.1013} \times X2 + \frac{0.0+0.1013}{0.3+0.1013} = 1.246X2+0.2524$$

< Temperature correction operation example >
Where Temperature span: 0 to 150°C, Standard temperature: 80°C (0°C = 273.15°K), and (X3: Temperature signal 1 to 1.0)

$$\frac{\text{Temperature Span}}{\text{Standard Pressure}} \times \text{Temperature Signal} + \frac{\text{0\% Temperature}}{\text{Standard Temperature}}$$

$$\frac{150}{80+273.15} \times X3 + \frac{0+273.15}{80+273.15} = 0.4247X3+0.7735$$

<Flow rate after Temperature and Pressure Correction>

$$Y1 = X1 \times \frac{1.246X2+0.2524}{0.4247X3+0.7735}$$

X1 : Flowrate (Karman vortex) signal

Description	In general, pressure and temperature sensors are installed upstream of Flowmeter in Temperature and Pressure correction applications. In case that vortex flowmeter is utilized, the sensors are installed downstream of the Flowmeter because this flowmeter may cause measuring errors by generating Karman vortex. Temperature and Pressure correction operation is executed for the vortex flowmeter whose measurement is based on volume flow. Temperature and Pressure correction is not necessary for the vortex flowmeter which measures flowrate by mass flow rate.

Connection Diagram

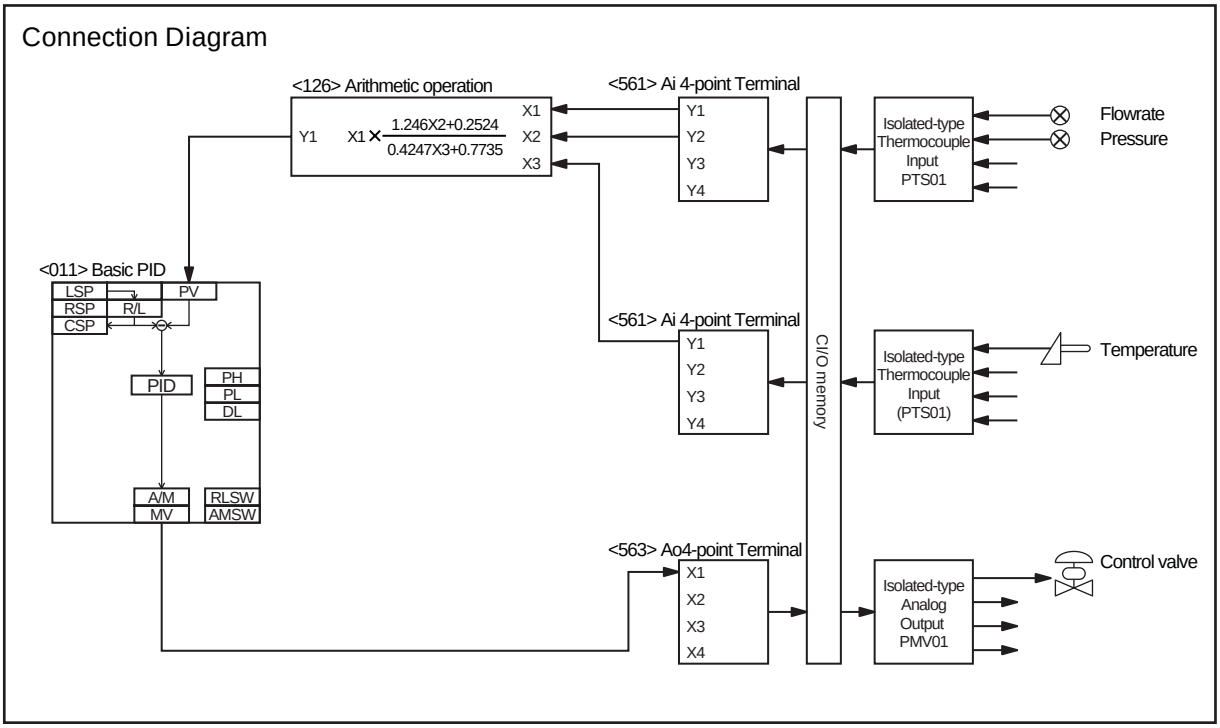

NOTE: No. < >of the Field Terminal is block model of the LCB (CS1W-LCB01/05).

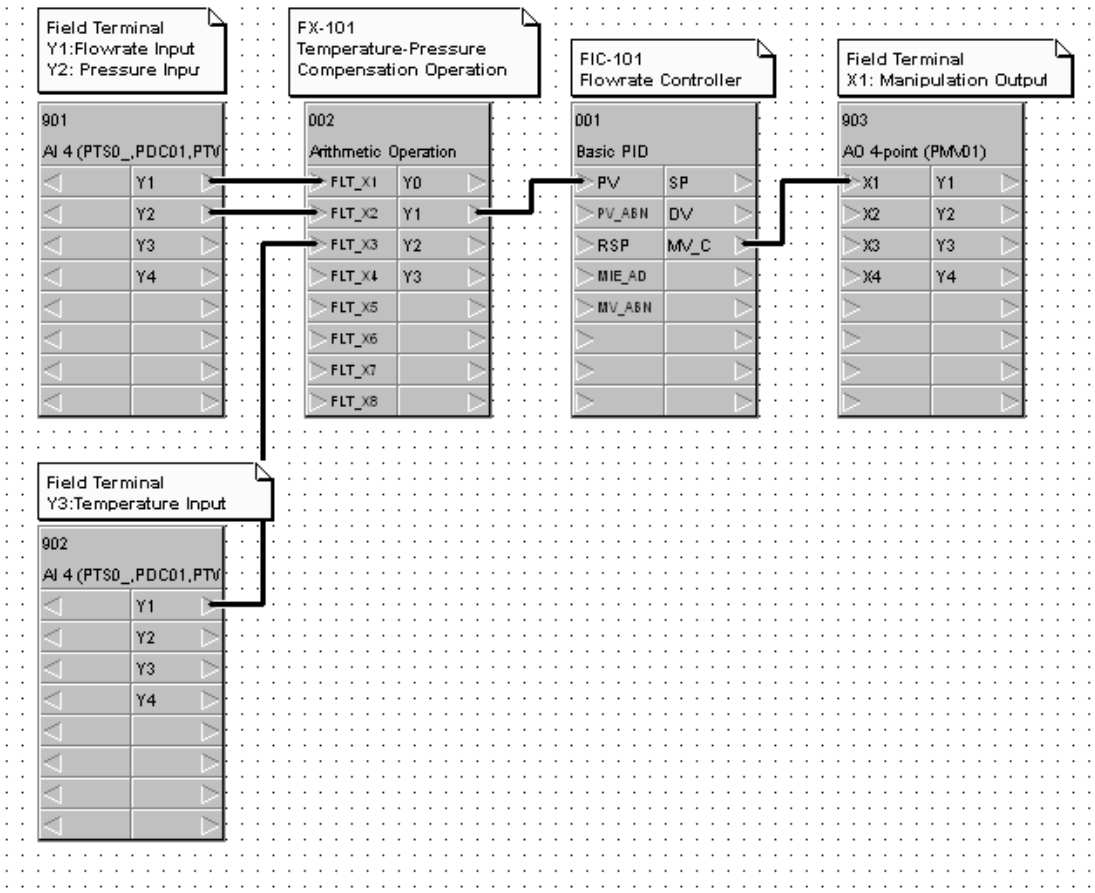

ITEM list (Temperature and pressure correction-Vortex flowmeter)

Block address	Block Model	Block Name	ITEM	Comment	Data	Settings
000	<000>	System Common Block	004	System common operation cycle	1	0.1sec
			018	START mode at power ON	1	Hot Start
001	<011>	Basic PID	004	Operation cycle	1	0.1sec
			024	Set Point setting mode	0	Local only
			052	Control action	0	Reverse
002	<126>	Arithmetic Operation	004	Operation cycle	1	0.1sec
			031	X1 Scaling upper limit	1.0000E+02	Flow rate input
			032	X1 Scaling lower limit	0.0000E+00	
			033	X2 Scaling upper limit	1.0000E+02	Pressure input
			034	X2 Scaling lower limit	0.0000E+00	
			035	X3 Scaling upper limit	1.0000E+02	Temperature input
			036	X3 Scaling lower limit	0.0000E+00	
			051	A1	1.2460E+00	Pressure coefficient
			052	A2	2.5240E+00	Pressure bias
			053	A3	4.2470E-01	Temperature coefficient
			054	A4	7.7350E+01	Temperature bias
			081	THEN expression	X1*(A1*X2+A2)/(A3*X3+A4)	Temperature correction formula
			091	Output reverse scaling upper limit	1.0000E+02	Manipulation output
			092	Output reverse scaling lower limit	0.0000E+00	
901	<561>	AI4-point Terminal	004	Operation cycle	1	0.1sec
			007	Unit number	00	Input unit number
			010	Common or Y input range conversion	1	0-4000
902	<561>	AI4-point Terminal	004	Operation cycle	1	0.1sec
			007	Unit number	00	Input unit number
			010	Common or Y input range conversion	1	0-4000
903	<563>	AO4-point Terminal	004	Operation cycle	1	0.1sec
			007	Unit number	02	Output unit number

CSV Tag list (Temperature and pressure correction-vortex flowmeter)

Block address	Block Model	Block Name	Tag Name	Tag Comment	Scaling upper limit	Scaling lower limit	Decimal point position	Unit
001	<011>	Basic PID	TIC-101	Flow rate controller	5000	0	2	Nm3/h
002	<126>	Arithmetic Operation	FX-101	Correction Operation	-	-	-	-

4-7 Temperature and Pressure Correction (Differential Pressure Flowmeter)

Objective	Corrects density change involved in the change of fluid temperature and pressure in order to indicate flow rate in standard condition.
Process	Measures air flow rate with differential pressure flowmeter, such as Orifice and flow nozzle in the process in which air temperature and pressure fluctuate.

Process Flow

The differential pressure flowmeter measures volume flow rate under the condition that gas density stays constant. When measuring gas flow rate, change in temperature or pressure has influence on the density. Therefore, set the standard pressure and temperature and correct deviation against the standard values in order to indicate the flow rate by converting the value into the value in standard temperature and pressure.

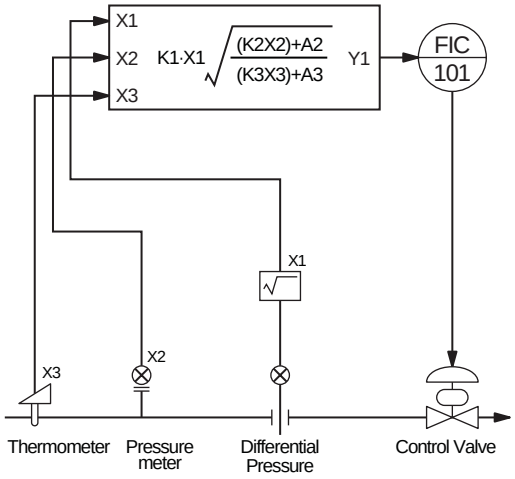

< Pressure correction example >
Pressure span: 0 to 0.5MPaG,
Standard pressure: 0.3MPaG, (atmospheric pressure: 0.1013MPa)
(X2: Pressure signal 0 to 1.0)

$$\sqrt{\frac{\text{Pressure Span}}{\text{Standard Pressure}} \times \text{Pressure Signal} + \frac{\text{0\% Pressure}}{\text{Standard Pressure}}}$$

$$\sqrt{\frac{0.5}{0.3+0.1013} \times X2 + \frac{0.0+0.1013}{0.3+0.1013}} = \sqrt{1.246X2+0.2524}$$

< Temperature correction example >
Temperature span: 0 to 150 degree centigrade
Standard temperature: 80 degree centigrade, (0°C=273.15K),
(X3: Temperature signal 1 to 1.0).

$$\sqrt{\frac{\text{Temperature Span}}{\text{Standard Pressure}} \times \text{Temperature Signal} + \frac{\text{0\% Temperature}}{\text{Standard Temperature}}}$$

$$\sqrt{\frac{150}{80+273.15} \times X3 + \frac{0+273.15}{80+273.15}} = \sqrt{0.4247X3+0.7735}$$

< Flow rate after temperature and pressure correction >

$$Y1 = \sqrt{X1 \times \frac{1.246X2+0.2524}{0.4247X3+0.7735}}$$

X1 : Flowrate (differential pressure) signal

Description	The flow rate of the orifice is represented by the following formula: $Q=0.08252\alpha\beta^2\varepsilon d^2 \sqrt{(\rho 1 - \rho 2)\ \rho/\rho 0}$ In this formula, $0.08252\alpha\ \beta^2\ \varepsilon\ d^2$ and ρ0 are constants. The $(\rho_1 - \rho_2)$ and ρ indicate flow rate (differential pressure) and variable of temperature or pressure, respectively. In restriction flowmeter, both $(\rho_1 - \rho_2)$ and ρ are placed in the square root. In case that differential pressure is input, extract square root in which Temperature and pressure correction operation and flow rate (differential pressure) signal are placed. In general, gas flow rate is represented in Nm^3/h, the value at standard ambient temperature and pressure. Specify regular temperature and pressure when orifice is manufactured, so that the range for the orifice can be set to convert the measured value into the value at standard ambient temperature and pressure (0 degree centigrade, 1 atmosphere). Symbols: Q: volume flow rate (Nm^3/h) $\rho_1 - \rho_2$: Differential pressure (mmH^2O) ρ: Density in measured condition ρ_0: Density in ambient temperature and pressure (kg/Nm^3) α: Flow rate coefficient β: Restriction ratio d/D ε: Isentropic exponent d: Orifice hole diameter (mm)

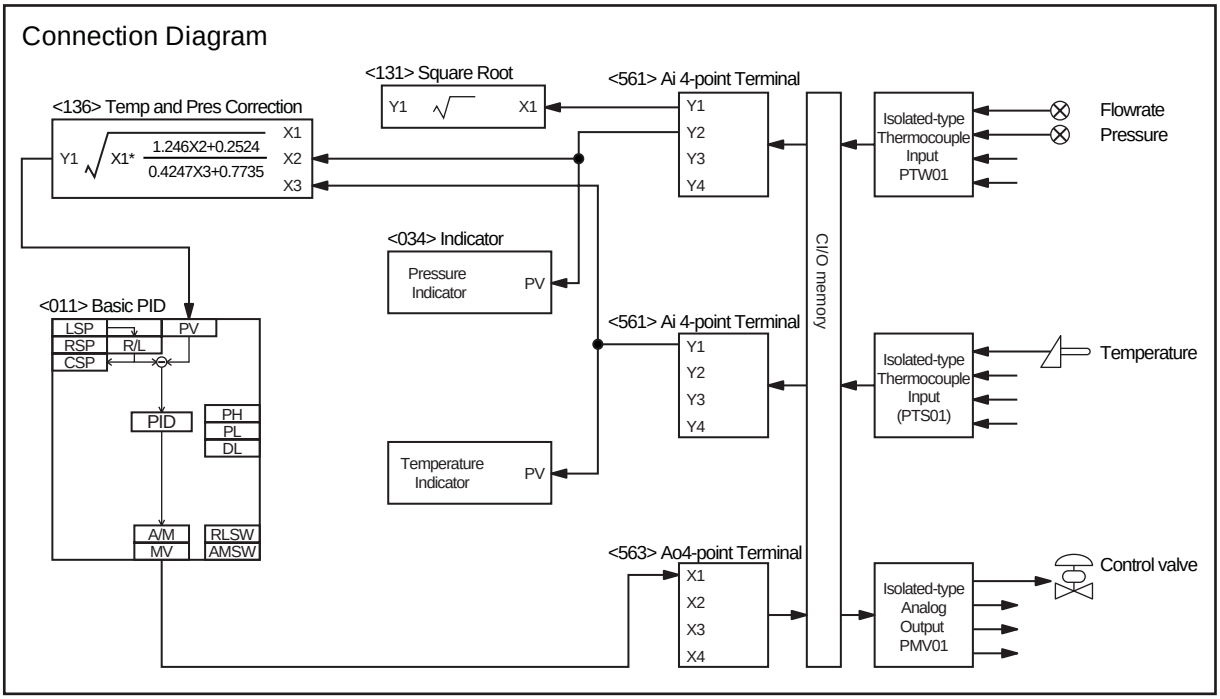

NOTE: No. < >of the Field Terminal is block model of the LCB (CS1W-LCB01/05).

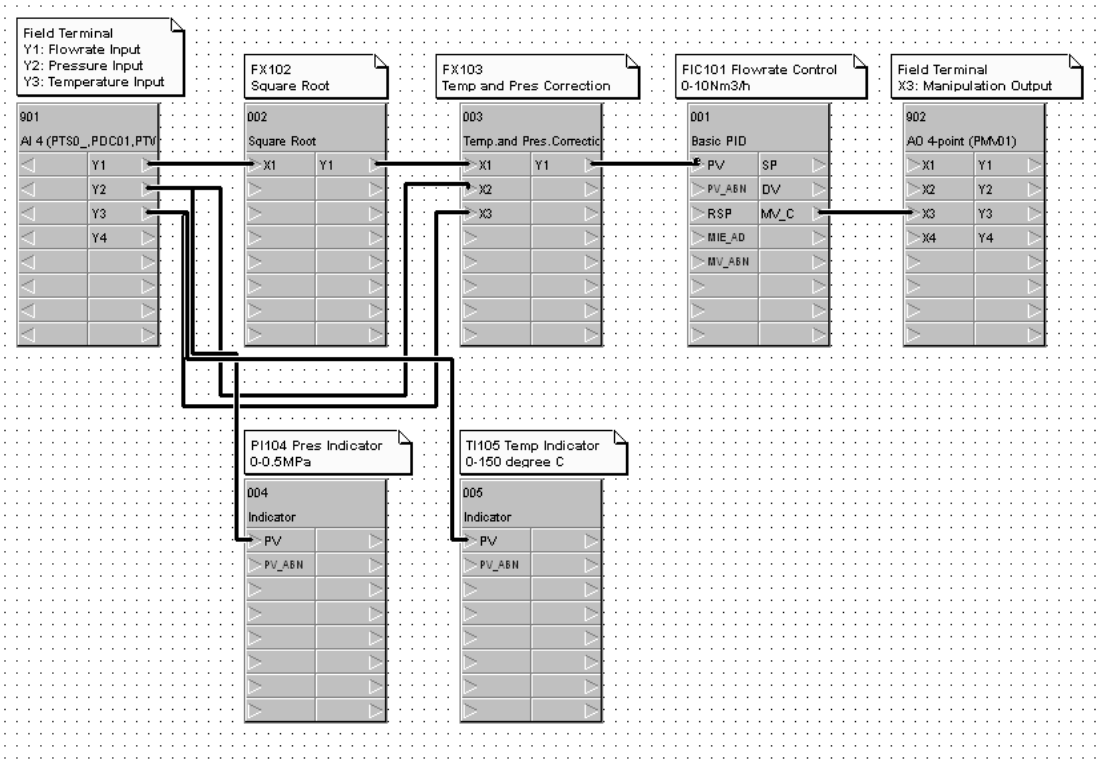

ITEM list (Temperature and pressure correction - differential pressure flowmeter)

Block address	Block Model	Block Name	ITEM	Comment	Data	Settings
000	<000>	System Common Block	004	System common operation cycle	1	0.1sec
			018	START mode at power ON	1	Hot Start
001	<011>	Basic PID	004	Operation cycle	1	0.1sec
			024	Set Point setting mode	0	Local only
			052	Control action	0	Reverse
002	<131>	Square Root	004	Operation cycle	1	0.1sec
			009	Gain	1.000	
			010	Input low-end cutout	1.00	%
003	<136>	Temperature and Pressure Correction	004	Operation cycle	1	0.1sec
			013	K1 gain	1.000	
			014	K2 gain	1.246	
			015	K3 gain	0.4247	
			016	A2 Bias	25.24	%
			017	A3 Bias	77.35	%
004	<034>	Indicator	004	Operation cycle	1	0.1sec
005	<034>	Indicator	004	Operation cycle	1	0.1sec
901	<561>	AI4-point Terminal	004	Operation cycle	1	0.1sec
			007	Unit number	00	
			010	Common or Y input range conversion	1	0-4000
902	<563>	AO4-point Terminal	004	Operation cycle	1	0.1sec
			007	Unit number	01	

CSV Tag list (Temperature and pressure correction - differential pressure flowmeter)

Block address	Block Model	Block Name	Tag Name	Tag Comment	Scaling upper limit	Scaling lower limit	Decimal point position	Unit
001	<011>	Basic PID	FIC101	Flowrate control	10000	0	3	Nm3/h
002	<131>	Square Root	FX102	Square Root	-	-	-	-
003	<136>	Temperature and Pressure Correction	FX103	Temperature correction	-	-	-	-
004	<034>	Indicator	PI104	Pressure indicator	5000	0	4	MPaG
005	<034>	Indicator	TI105	Temperature indicator	1500	0	1	°C

4-8 Temperature and Pressure Correction (Variable Area Flowmeter)

Objective	Corrects density change involved in the change of fluid temperature and pressure in order to indicate flow rate in standard condition.
Process	Measures air flow rate with Variable Area Flowmeter in a process in which air temperature and pressure fluctuate.

Process Flow

The variable area flowmeter measures volume flow rate under the condition that gas density stays constant. When measuring gas flow rate, change in temperature or pressure has influence on the density. Therefore, set the standard pressure and temperature and correct deviation against the standard values in order to indicate the flow rate by converting the value into the value in standard temperature and pressure.

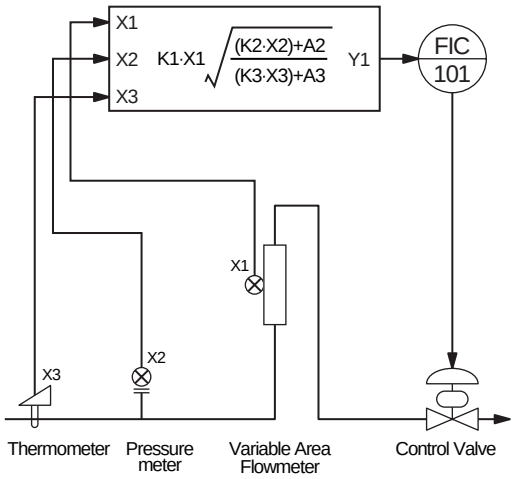

< Pressure correction example >
Pressure span: 0 to 0.5MPaG,
Standard pressure: 0.3MPaG, (atmospheric pressure: 0.1013MPa)
(X2: Pressure signal 0 to 1.0)

$$\sqrt{\frac{\text{Pressure Span}}{\text{Standard Pressure}} \times \text{Pressure Signal} + \frac{\text{0\% Pressure}}{\text{Standard Pressure}}}$$

$$\sqrt{\frac{0.5}{0.3+0.1013} \times X2 + \frac{0.0+0.1013}{0.3+0.1013}} = \sqrt{1.246X2+0.2524}$$

< Temperature correction example >
Temperature span: 0 to 150 ºC
Standard temperature: 80 ºC, (0 ºC=273.15K),
(X3: Temperature signal 0 to 1.0).

$$\sqrt{\frac{\text{Temperature Span}}{\text{Standard Pressure}} \times \text{Temperature Signal} + \frac{\text{0\% Temperature}}{\text{Standard Temperature}}}$$

$$\sqrt{\frac{150}{80+273.15} \times X3 + \frac{0+273.15}{80+273.15}} = \sqrt{0.4247X3+0.7735}$$

< Flow rate after temperature and pressure correction >

$$Y1 = X1 \times \sqrt{\frac{1.246X2+0.2524}{0.4247X3+0.7735}}$$

X1 : Flowrate (Variable area flowmeter) signal

Description	The flow rate of the variable area flowmeter is represented by the following formula: $Q=A*\alpha \sqrt{[2/p]*[V_f(\rho_f - \rho)/A_f]}$ In this formula, α, V_f, A_f, and Pf are constants: “A” represents flow rate signal and ρ represents variable of temperature and pressure. When Variable Area Flowmeter is utilized, variable A is linear to the flow rate and only variable ρ is placed in the square root. In this application, square root is not extracted for flow rate signal: only square root for temperature and pressure correction operation is extracted. In general, Nm^3/h is utilized for the range of gas flowmeter in order to represent the value in standard condition. Specify standard temperature and pressure, so that the range for the flowmeter can be manufactured to convert the measured value into the value in standard condition (0 degree centigrade, 1 atmosphere). Symbols: Q: volume flow rate (Nm^3/h) A: Space area A_f: Float cross section area α: flow rate coefficient ρ: Fluid density ρ_f :Float density V_f :Float volume

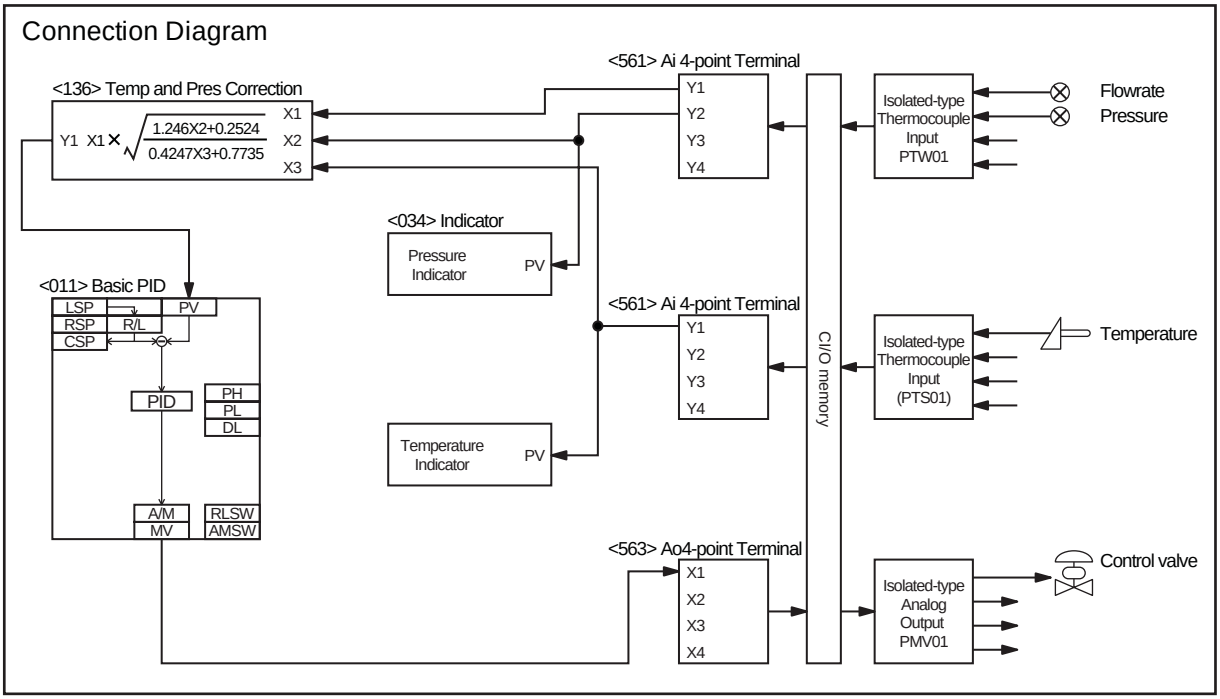

NOTE: No. < >of the Field Terminal is block model of the LCB (CS1W-LCB01/05).

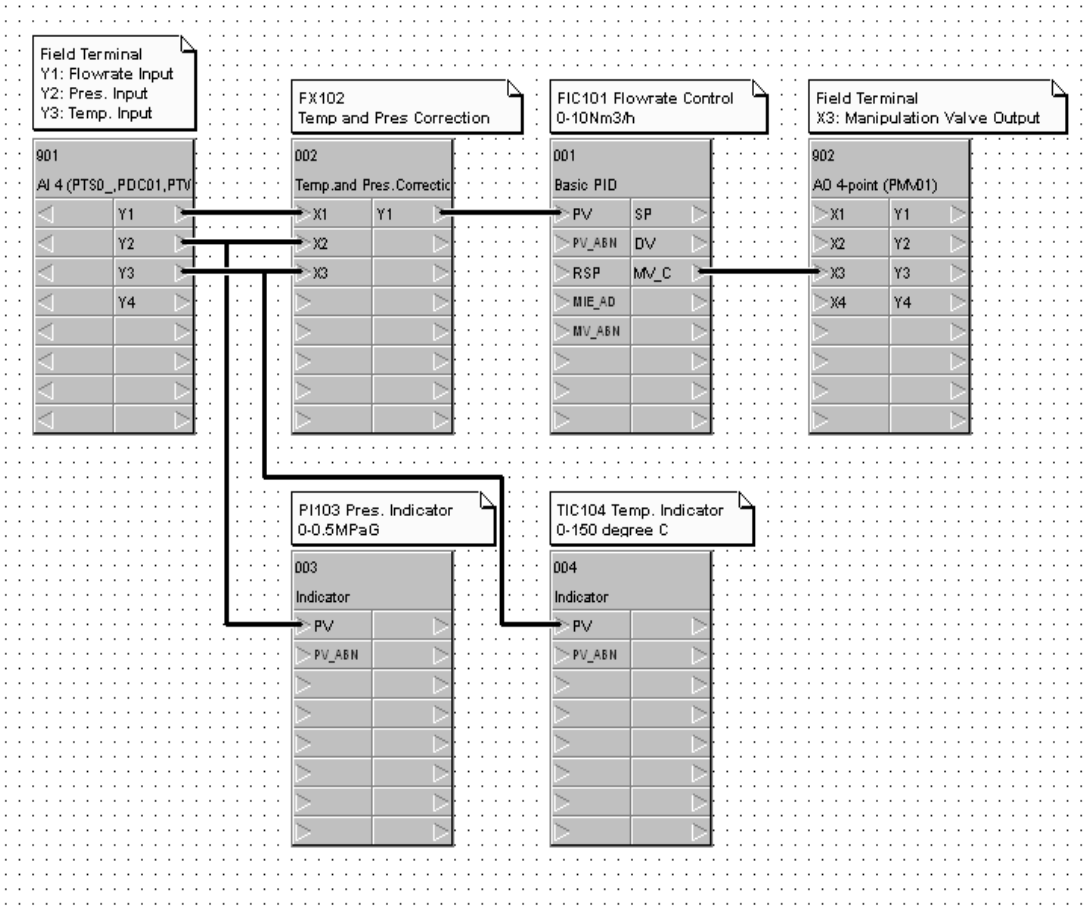

ITEM list (Temperature and pressure correction - Variable area flowmeter)

Block address	Block Model	Block Name	ITEM	Comment	Data	Settings
000	<000>	System Common Block	004	System common operation cycle	1	0.1sec
			018	START mode at power ON	1	Hot Start
001	<011>	Basic PID	004	Operation cycle	1	0.1sec
			024	Set Point setting mode	0	Local only
			052	Control action	0	Reverse
002	<136>	Temperature and Pressure Correction	004	Operation cycle	1	0.1sec
			013	K1 gain	1.000	
			014	K2 gain	1.246	
			015	K3 gain	0.4247	
			016	A2 Bias	25.24	%
			017	A3 Bias	77.35	%
003	<034>	Indicator	004	Operation cycle	1	0.1sec
004	<034>	Indicator	004	Operation cycle	1	0.1sec
901	<561>	AI4-point Terminal	004	Operation cycle	1	0.1sec
			007	Unit number	00	
			010	Common or Y input range conversion	1	0-4000
902	<563>	AO4-point Terminal	004	Operation cycle	1	0.1sec
			007	Unit number	01	

CSV Tag list (Temperature and pressure correction - Variable area flowmeter)

Block address	Block Model	Block Name	Tag Name	Tag Comment	Scaling upper limit	Scaling lower limit	Decimal point position	Unit
001	<011>	Basic PID	FIC101	Flowrate control	10000	0	3	Nm3/h
002	<136>	Temperature and Pressure Correction	FX102	Temperature correction	-	-	-	-
003	<034>	Indicator	PI103	Pressure indicator	5000	0	4	MPaG
004	<034>	Indicator	TI104	Temperature indicator	1500	0	1	°C

4-9 Average Temperature Control for Constant Temperature Bath (With bias for input and output)

Objective	Measures temperature at multiple points and control the temperature with the average value.
Process	For a process in which internal temperature is not uniform, such as constant temperature bath, reactor, and heating furnace

Process Flow

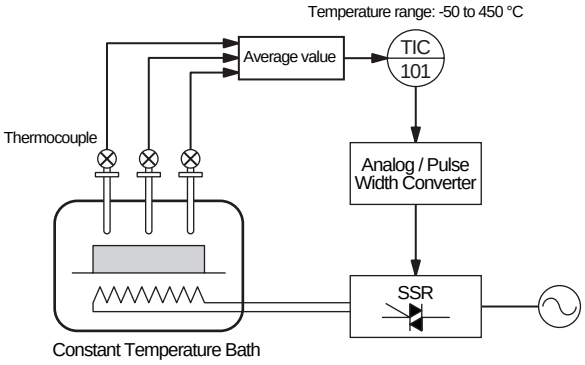

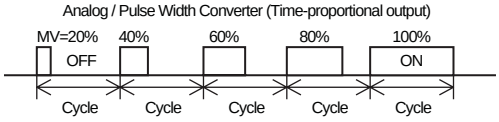

<Average temperature operation (with bias)>
Input 1 range : -50 to 350°C (K1=400,A1=-50)
Input 2 range : 0 to 300°C (K2=300,A2=0)
Input 3 range : 100 to 450°C (K3=350,A3=100)
Output range : -50 to 450°C (K0=500,A0=-50)
<Operation expression>
K0*Y0+A0={(K1*X1+A1)+(K2*X2+A2)+K3*X3+A3)}/3
Assign the ranges to the variables: (See. Description)
Y0=0.267*X1+0.2*X2+0.233*X3+0.133

<Recalculation>
Input 1: 200°C(X1=62.5%)
Input 2: 250°C(X2=83.3%)
Input 3: 180°C(X3=22.9%)
Output (average of the inputs) =(200+250+180)/3=210°C

Assign the values into the expression above.
Y0=0.267*0.625+0.2*0.833+0.233*0.229+0.133
Y0=0.5198
51.98% of the Output (-50 to 450°C) is the following:
500*0.5198-50=209.9°C, which is almost equal to the average of the inputs.

Description	1) Multiple types of temperature inputs (thermocouple, resistance thermometer) can be taken in. 2) Multiple temperature measurement ranges can be handled. (parameter settings are written above). <Operation expression> 500*Y0-50={(400*X1-50)+(300*X2)+(350*X3+100)}/3 Y0={400/500*X1+300/500*X2+350/500*X3+(-50+0+100)/500}/3+50/500 Y0=0.267*X1+0.2*X2+0.233*X3+0.1333

Connection Diagram

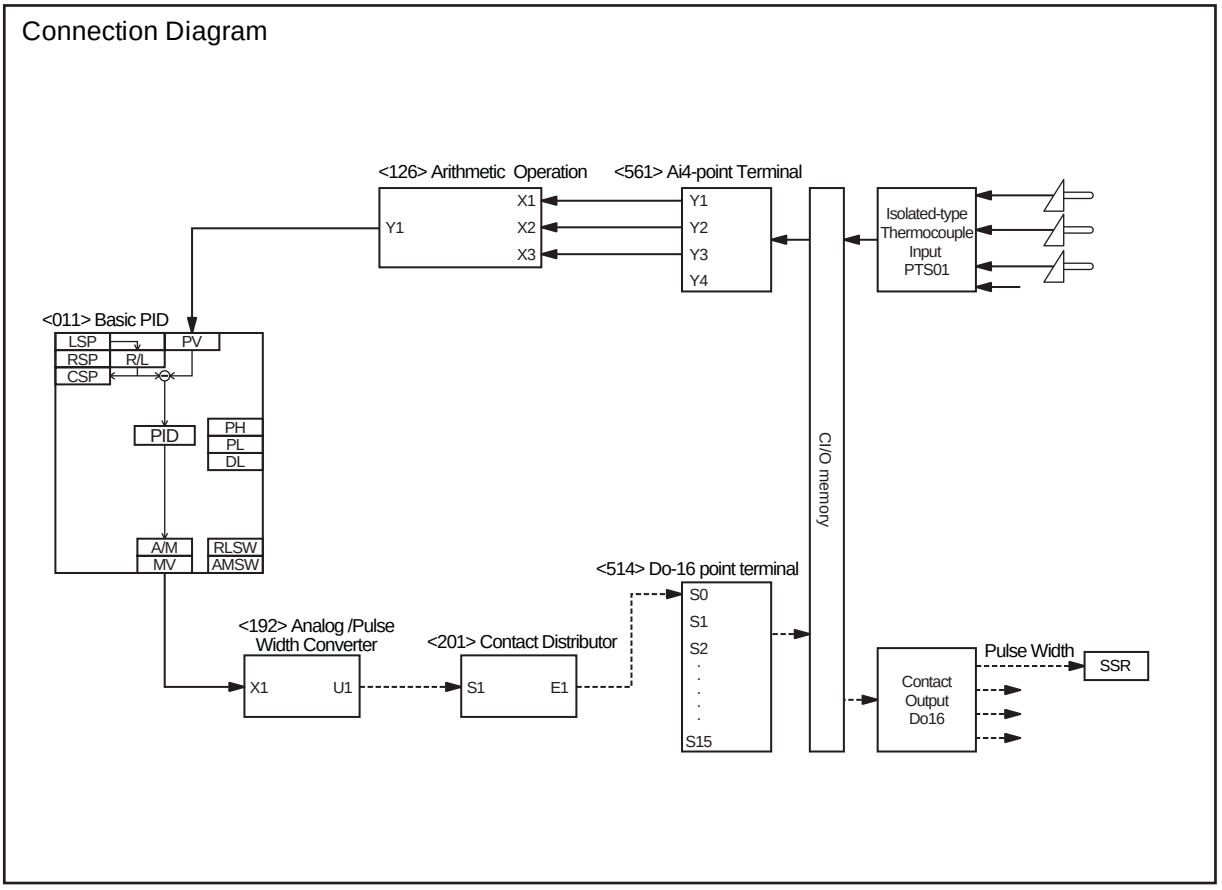

NOTE: No. < >of the Field Terminal is block model of the LCB (CS1W-LCB01/05).

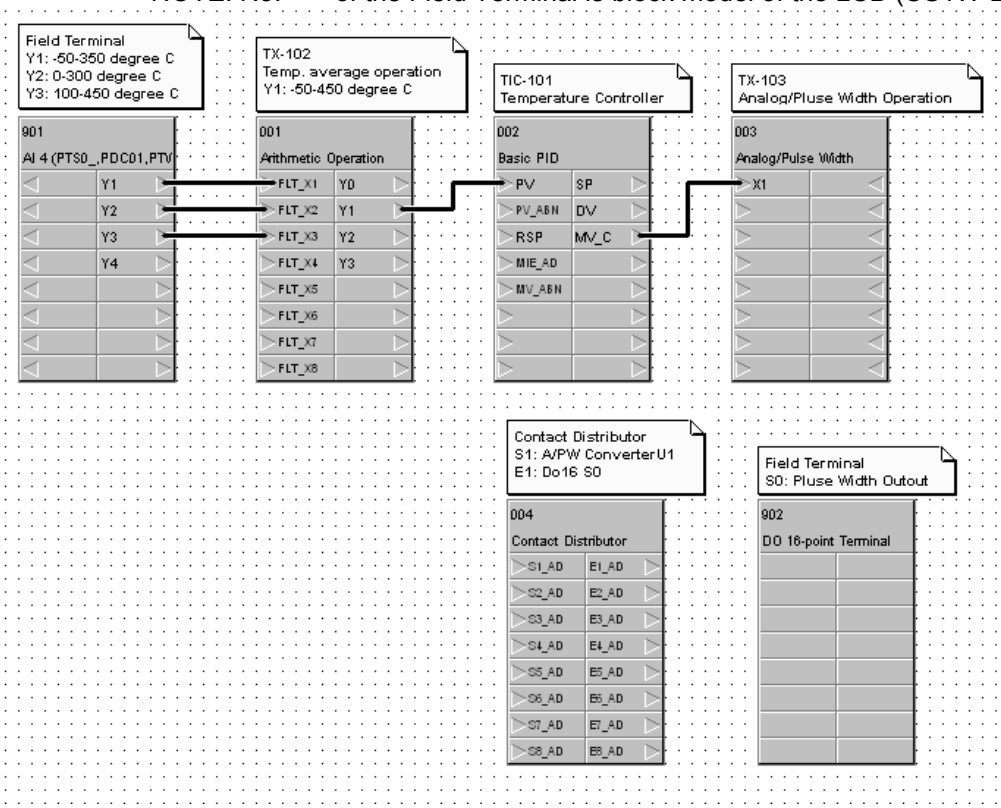

ITEM list (Average Temperature of constant temperature bath - Bias)

Block address	Block Model	Block Name	ITEM	Comment	Data	Settings
000	<000>	System Common Block	004	System common operation cycle	1	0.1sec
			018	START mode at power ON	1	Hot Start
001	<126>	Arthmetic Operation	004	Operation cycle	1	0.1sec
			031	X1 scaling upper limit	1.0000E+02	
			032	X1 scaling lower limit	0.0000E+00	
			033	X2 scaling upper limit	1.0000E+02	
			034	X2 scaling lower limit	0.0000E+00	
			035	X3 scaling upper limit	1.0000E+02	
			036	X3 scaling lower limit	0.0000E+00	
			051	A1	2.6667E-01	
			052	A2	2.0000E-01	
			053	A3	2.3333E-01	
			054	A4	1.3333E+01	Enter bias in %.
			081	THEN expression	A1*X1+A2*X2+A3*X3+A4	
			091	Output reverse scaling upper limit	1.0000E+02	
			092	Output reverse scaling lower limit	0.0000E+00	
002	<011>	Basic PID	004	Operation cycle	1	0.1sec
			024	Set Point setting mode	0	Local only
			052	Control action	0	Reverse
003	<192>	Analog/Pulse Width Converter	004	Operation cycle	1	0.1sec
			009	Pulse cycle time	10.0	sec
004	<201>	Constant Distributor	004	Operation cycle	1	0.1sec
			006	Output type	0	Constant output
901	<561>	AI4-point Terminal	004	Operation cycle	1	0.1sec
			007	Unit number	00	Input unit No.
			010	Common or Y input range conversion	1	0-4000
902	<514>	DO16-point Terminal	004	Operation cycle	1	0.1sec
			007	CIO word No,	00000	

CSV Tag list (Average Temperature of constant temperature bath - Bias)

Block address	Block Model	Block Name	Tag Name	Tag Comment	Scaling upper limit	Scaling lower limit	Decimal point position	Unit
001	<126>	Arthmetic Operation	TX-102	Average temperature operation	-	-	-	-
002	<011>	Basic PID	TIC-101	Temperature controller	4500	-500	1	°C
003	<192>	Analog/Pulse Width Converter	TX-103	Analog/Pulse Width Converter	-	-	-	-

4-10 Average Temperature Control for Constant Temperature Bath

Objective	Measures temperature at multiple points and control the temperature with the average value.
Process	For a process in which internal temperature is not planner, such as constant temperature bath, reactor, and heating furnace

Process Flow

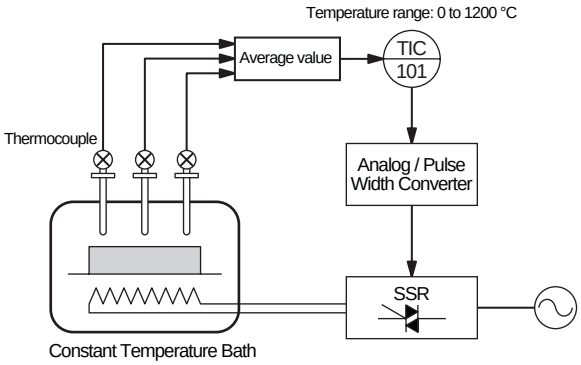

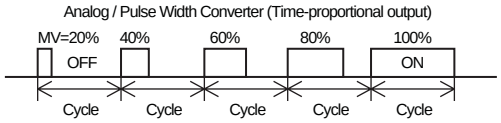

<Average temperature operation (For multiple ranges)>
A1: Input 1 range/Output range
A2: Input 2 range/Output range
A3: Input 3 range/Output range

Average Output =(A1*X1+A2*X2+A3*X3)/3

<Recalculation>
In a example with the following :
Input 1 range: 900°C
Input 2 range: 800°C
Input 3 range: 600°C
Output range: 1200°C
A1 : 0.75
A2 : 0.667
A3 : 0.5
Input 1=450°C (50%)
Input 2=600°C (75%)
Input 3=480°C (80%),
The output can be calculated as follows:
Output=(0.75*0.5+0.667*0.75+0.5*0.8)/3
=0.4251

1200°C*0.4251=510.1°C
(450°C+600°C+480°C)/3=510°C

Description	1) Multiple types of temperature inputs (thermocouple, resistance thermometer) can be taken in. 2) Multiple temperature measurement ranges can be handled. (parameter settings are written above).

Connection Diagram

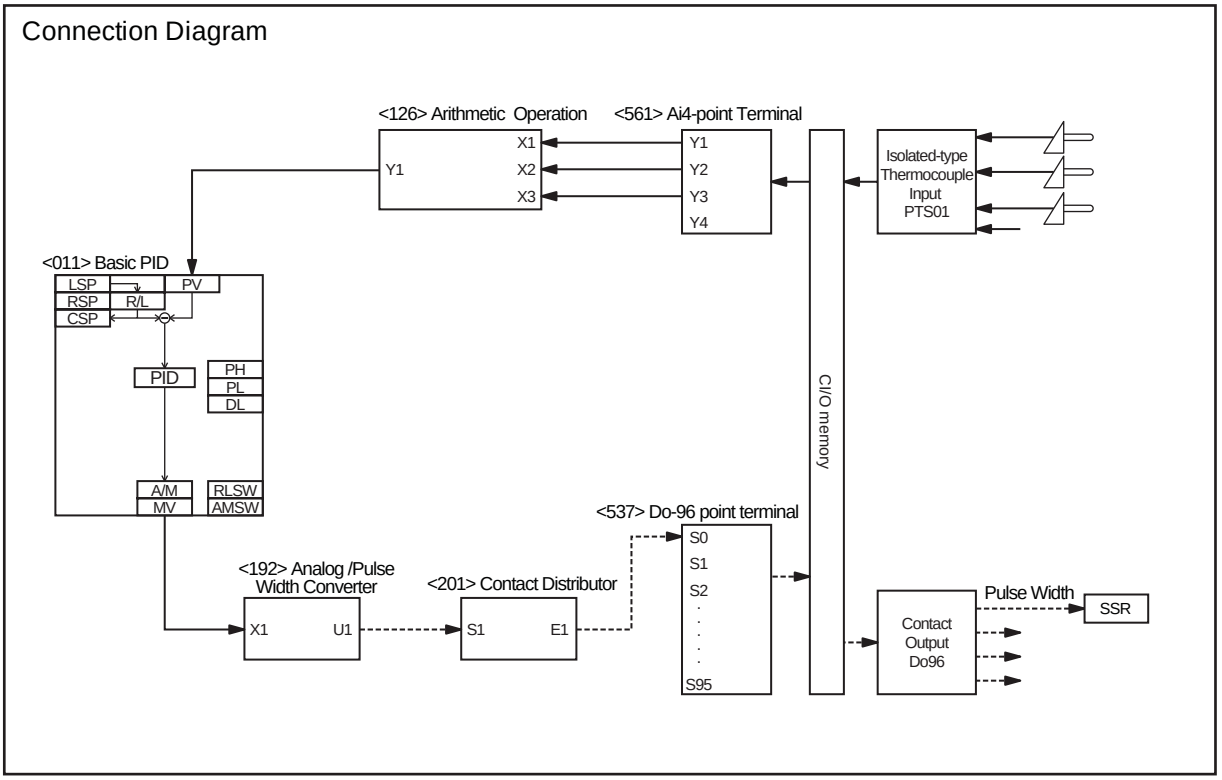

NOTE: No. < >of the Field Terminal is block model of the LCB (CS1W-LCB01/05).

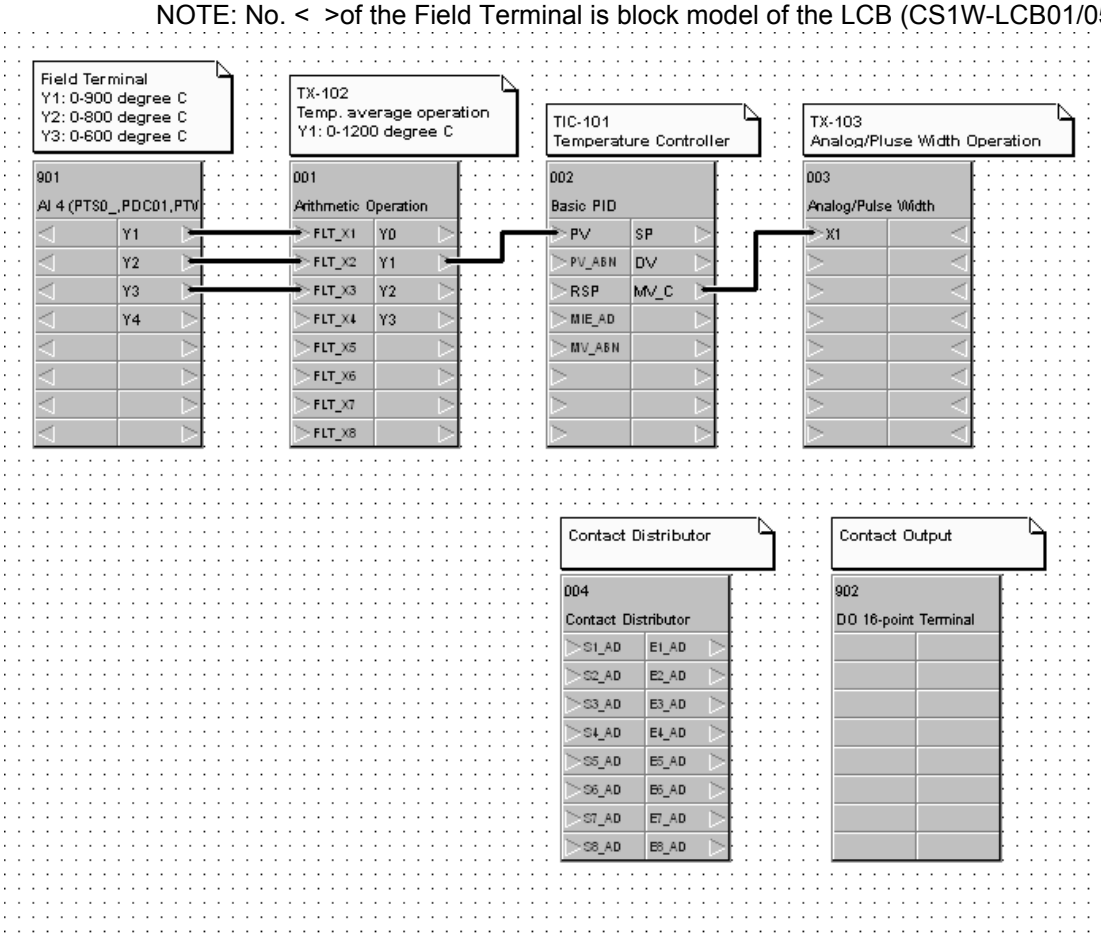

ITEM list (Average Temperature of constant temperature bath)

Block address	Block Model	Block Name	ITEM	Comment	Data	Settings
000	<000>	System Common Block	004	System common operation cycle	1	0.1sec
			018	START mode at power ON	1	Hot Start
001	<126>	Arthmetic Operation	004	Operation cycle	1	0.1sec
			031	X1 scaling upper limit	1.0000E+02	
			032	X1 scaling lower limit	0.0000E+00	
			033	X2 scaling upper limit	1.0000E+02	
			034	X2 scaling lower limit	0.0000E+00	
			035	X3 scaling upper limit	1.0000E+02	
			036	X3 scaling lower limit	0.0000E+00	
			051	A1	7.5000E-01	
			052	A2	6.6666E-01	
			053	A3	5.0000E-01	
			081	THEN expression	(A1*X1+A2*X2+A3*X3)/3	
			091	Output reverse scaling upper limit	1.0000E+02	
			092	Output reverse scaling lower limit	0.0000E+00	
002	<011>	Basic PID	004	Operation cycle	1	0.1sec
			024	Set Point setting mode	0	Local only
			052	Control action	0	Reverse
003	<192>	Analog/Pulse Width Converter	004	Operation cycle	1	0.1sec
			009	Pulse cycle time	10.0	sec
004	<201>	Constant Distributor	004	Operation cycle	1	0.1sec
			006	Output type	0	Constant output
901	<561>	AI4-point Terminal	004	Operation cycle	1	0.1sec
			007	Unit number	00	Input unit No.
			010	Common or Y input range conversion	1	0-4000
902	<537>	DO96-point Terminal	004	Operation cycle	1	0.1sec
			007	CIO word No,	00000	

CSV Tag list (Average Temperature of constant temperature bath)

Block address	Block Model	Block Name	Tag Name	Tag Comment	Scaling upper limit	Scaling lower limit	Decimal point position	Unit
001	<126>	Arthmetic Operation	TX-102	Average temperature operation	-	-	-	-
002	<011>	Basic PID	TIC-101	Temperature controller	0	12000	1	°C
003	<192>	Analog/Pulse Width Converter	TX-103	Analog/Pulse Width Converter	-	-	-	-

4-11 Calorie Control of Mixed Gas

Objective	Controls gas mix ratio to prevent composition gas fluctuation in order to keep the constant combustion calories.
Process	For a process which utilizes mixed gas for fuel

Process Flow

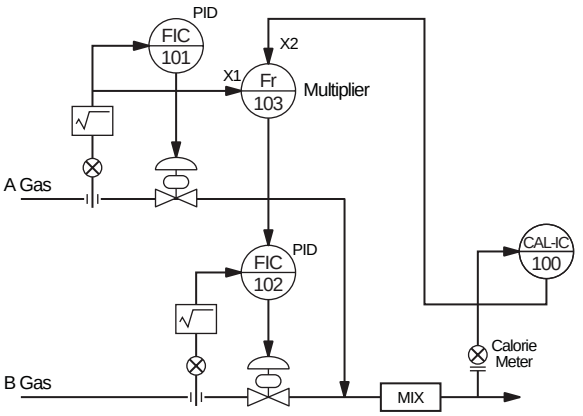

Measures mix gas calories to control mix ratio of A and B gases, so that constant calorie can be provided.
<Operation expression>
A gas range: 0 to 80 Nm^3/h (X1)
B gas range: 0 to 100 Nm^3/h (Y1)
Mix ratio: 0.8 to 1.2 (X2)
100Y1=80X1*(0.4X2+0.8)
Y1=80/100X1*(0.4X2+0.8)
K1=0.8
K2=0.4
A2=0.8
A1=A3=0

<Recalculation>
A gas: 60m^3/h (75%)
Mix ratio: 1.05 (62.5%)
Y1=0.8*0.75*(0.4*0.625+0.8)=0.63

FIC102 setting value is 63Nm^3/h
A gas 60Nm^3/h * 1.05 = 63Nm^3/h

Description	Remote setting-type ratio setting device which is build with Multiplication block.

Connection Diagram

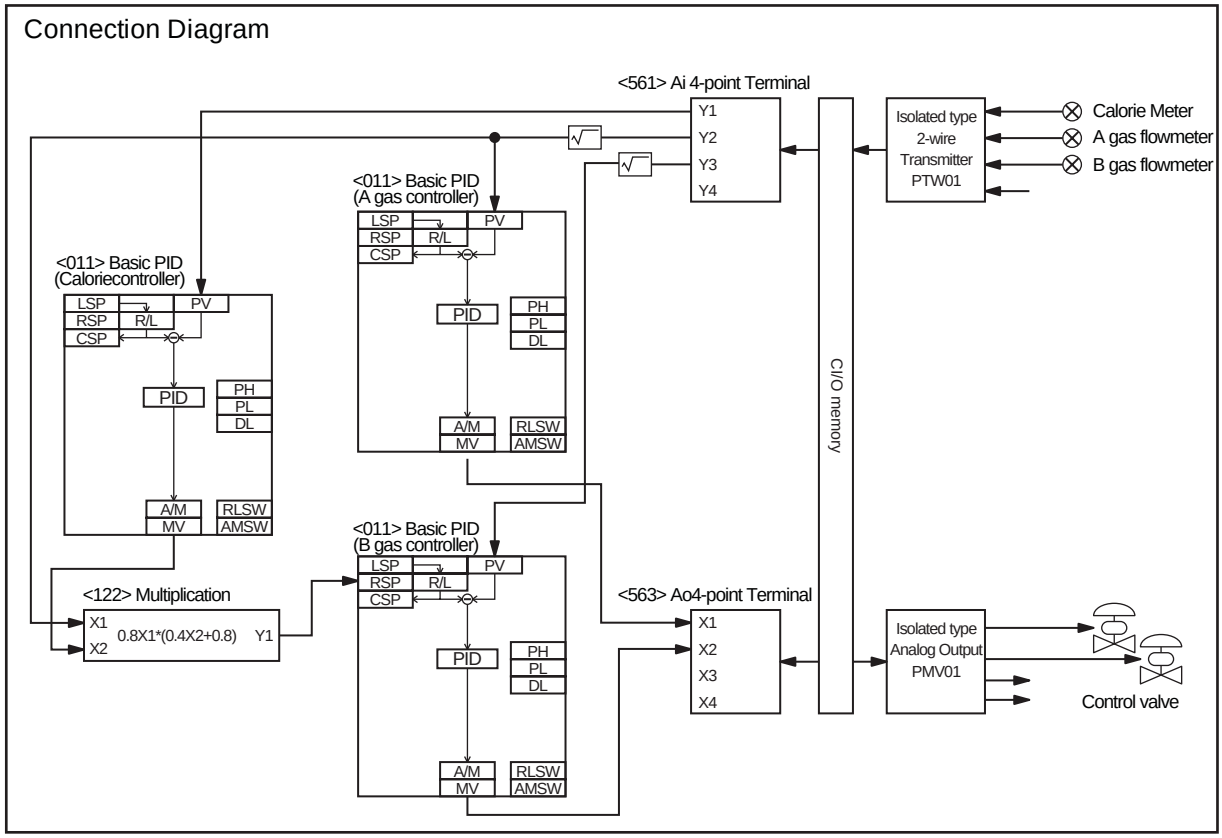

NOTE: No. < >of the Field Terminal is block model of the LCB (CS1W-LCB01/05).

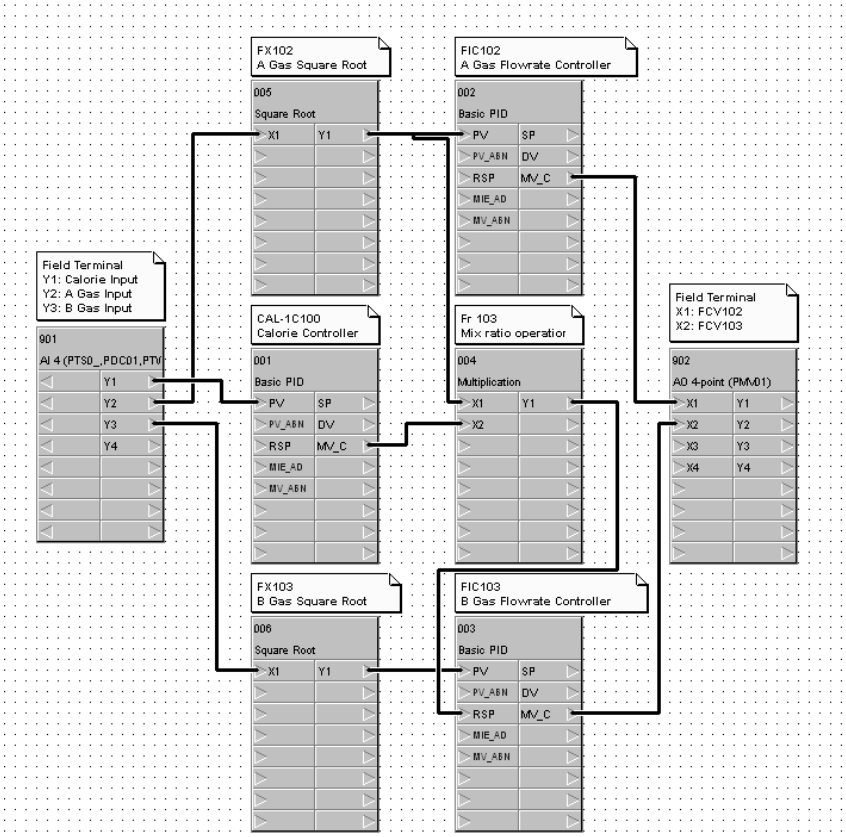

ITEM list (Mixed gas calorie control)

Block address	Block Model	Block Name	ITEM	Comment	Data	Settings
000	<000>	System Common Block	004	System common operation cycle	1	0.1sec
			018	START mode at power ON	1	Hot Start
001	<011>	Basic PID	004	Operation cycle	1	0.1sec
			024	Set Point setting mode	0	Local
			052	Control action	0	Reverse
002	<011>	Basic PID	004	Operation cycle	1	0.1sec
			024	Set Point setting mode	0	Local
			052	Control action	0	Reverse
003	<011>	Basic PID	004	Operation cycle	1	0.1sec
			024	Set Point setting mode	0	Remote/Local
			052	Control action	0	Reverse
004	<122>	Multiplication	004	Operation cycle	1	0.1 sec
			011	K1 Gain	0.8	
			012	K2 Gain	0.4	
			013	A1 Bias	0.0	
			014	A2 Bias	80.8	
			015	A3 Bias	0.0	
005	<131>	Squre Root	004	Operation cycle	1	0.1sec
			009	K1 Gain	1.000	
			010	A1 Input low-end cutout setting	0.00	
006	<131>	Squre Root	004	Operation cycle	1	0.1sec
			009	K1 Gain	1.000	
			010	A1 Input low-end cutout setting	0.00	
901	<561>	AI4-point terminal	004	Operation cycle	1	0.1sec
			007	Unit No,	00	Input Unit No,
			010	Common or Y1 input range conversion	1	0-4000
902	<563>	AO4-point terminal	004	Operation cycle	1	0.1sec
			007	Unit No,	01	Output Unit No,

CSV Tag list (Mixed gas calorie control)

Block address	Block Model	Block Name	Tag Name	Tag Comment	Scaling upper limit	Scaling lower limit	Decimal point position	Unit
001	<011>	Basic PID	CAL-IC100	Calorie meter	10000	0	0	kcal
002	<011>	Basic PID	FIC101	A gas flow rate	8000	0	2	Nm3/h
003	<011>	Basic PID	FIC102	B gas flow rate	10000	0	2	Nm3/h
004	<122>	Multiplication	Fr103	Mix ratio calculation	-	-	-	-
005	<131>	Square Root	FX101	Square Root	-	-	-	-
006	<131>	Square Root	FX102	Square Root	-	-	-	-

4-12 Neutralizing of Acid Discharged Water

Objective	Linearizes Open Loop Gain
Process	PH neutralizing control

Process Flow

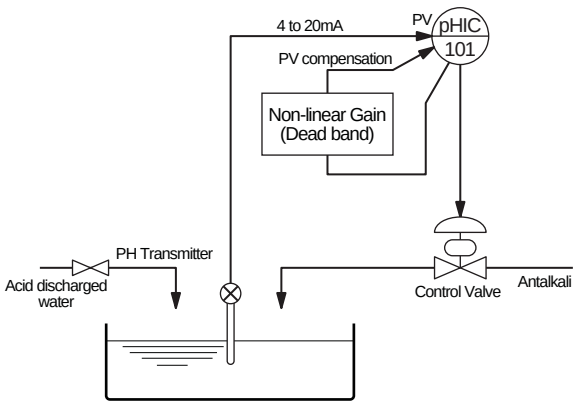

1) Discharged water with small PH buffering action
2) Discharged water with strong PH buffering action

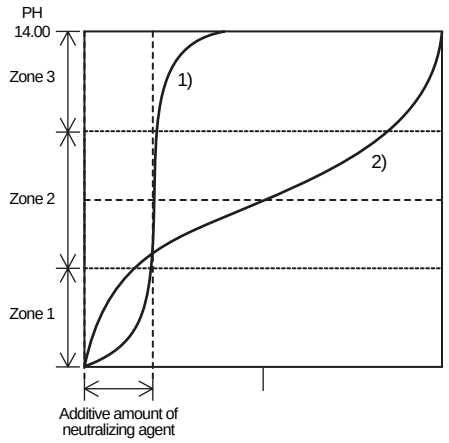

Description	In PH neutralizing process, process gain tends to be large at a point near the neutralization point. In this non-linear process, the larger the deviation becomes, the smaller the gain becomes. In case that linear controller is utilized, PH value fluctuates at the point open loop gain exceeds 1. In this application, gain of the controller is controlled to be low near the neutralization point, so that stable control can be achieved by keeping the open loop gain uniform over the entire range. The connection diagram is built as described above, because not deviation but PV compensation is input to Basic or Advanced PID blocks.

Connection Diagram

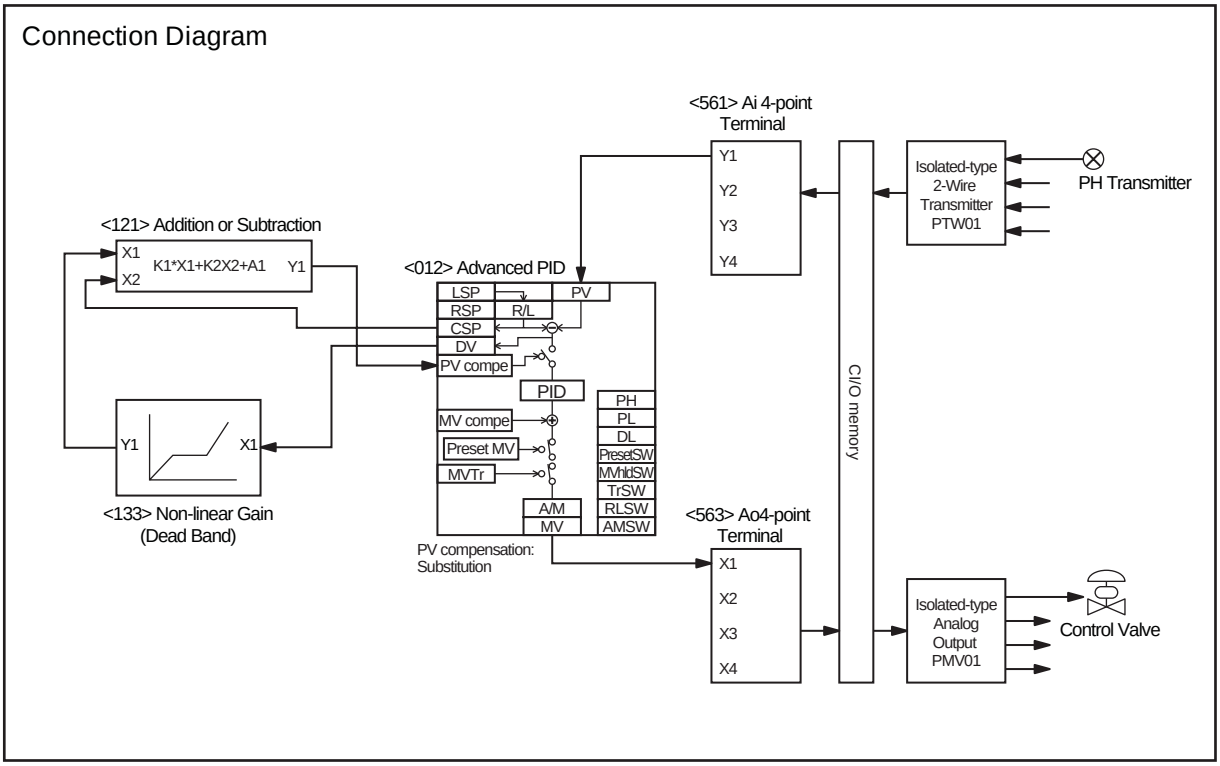

NOTE: No. < >of the Field Terminal is block model of the LCB (CS1W-LCB01/05).

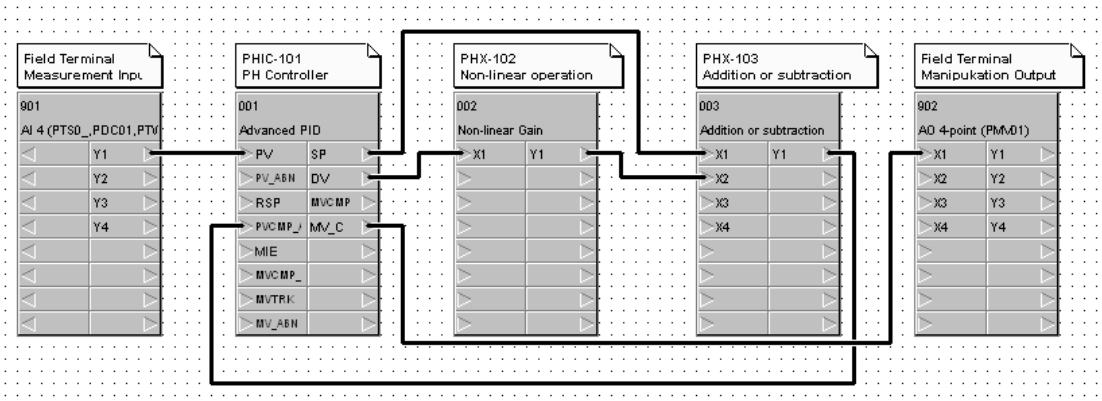

ITEM list (Non-linear controller)

Block address	Block Model	Block Name	ITEM	Comment	Data	Settings
000	<000>	System Common Block	004	System common operation cycle	1	0.1sec
			018	START mode at power ON	1	Hot Start
001	<012>	Advanced PID	004	Operation cycle	1	0.1sec
			045	PV compensation mode	3	Substitution
			046	PV compensation ON/OFF	1	ON
			052	Control action	0	Reverse
002	<133>	Non-linear Gain (Dead Band)	004	Operation cycle	1	0.1sec
			009	K1 gain	1.000	
			010	K2 gain	0.500	
			011	K3 gain	1.000	
			012	Segment point	10.00	
003	<121>	Addition or Subtraction	004	Operation cycle	1	0.1sec
			015	K1 gain	1.000	
			016	K2 gain	1.000	
			019	A1 bias	0.00	
901	<561>	AI4-point Terminal	004	Operation cycle	1	0.1sec
			007	Unit number	00	Input unit No.
			010	Common or Y input range conversion	1	0-4000
902	<563>	AO4-point Terminal	004	Operation cycle	1	0.1sec
			007	Unit number	01	Output unit No.

CSV Tag list (Non-linear controller)

Block address	Block Model	Block Name	Tag Name	Tag Comment	Scaling upper limit	Scaling lower limit	Decimal point position	Unit
001	<012>	Advanced PID	PHIC-101	PH controller	1400	0	2	PH
002	<133>	Non-linear Gain (Dead Band)	PHX-102	Non-linear	-	-	-	-
003	<121>	Addition or Subtraction	PHX-103	Addition or Suntraction	-	-	-	-

4-13 Arithmetic Operation (Addition or Subtraction)

Objective	Calculates average of multiple analog signals.
Process	

Process Flow

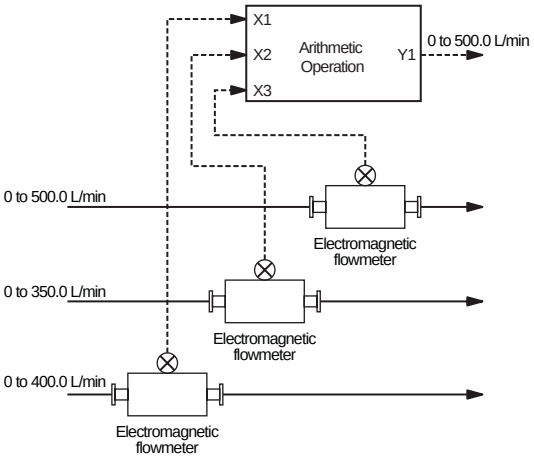

Below is the arithmetic expression for average operation.
Y1=(K1X1+K2X2 ···· + KnXn)/n

To execute average operation, utilize the Arithmetic Operation block.
< Operation example >
When ranges of each signals are set as shown below:
Input X1: 0 to 400 L/min
Input X2: 0 to 350 L/min
Input X3: 0 to 500 L/min
Output Y1: 0 to 500 L/min

Assign the span of each Inputs and Ouput.
500Y1=(400X1+350X2+500X3)/3
Y1=(400/500X1+350/500X2+500/500X3)/3
Y1=0.2667X1+0.2333X2+0.3333X3

< Recalculation >
When each input are set as written below:
Input X1: 200 L/min (50%)
Input X2: 250 L/min (71.43%)
Input X3: 280 L/min (56%)
Y1=0.2667*0.5+0.2333*0.7143+0.3333*0.56
Y1=0.4866
The 48.66% of Output 0 to 500 L/min equals to 243.3 L/min
(200+250+280)/3=243.3 L/min

Description

To calculate the coefficient/bias of average operation for signals with bias, utilize the following expression:
(Outspan*Y1+outBI)=[(in1Span*X1±in1BI)+)(in2span*X2±in2BI)····(in n span*Xn±in n BI)]/n
Here, the outspan, outBI, and in2 mean a output span, bias of Output, and Input 2, respectively.
The X and Y indicate 0 to 1 signal.

< Operation example >
Output: -50 to 250°C(span=300, bias=-50)
Input1 : -100 to 200°C(span=300, bias=-100)
Input2 : 0 to 300°C(span=300, bias=0)
Input3 : +50 to 250°C(span=200, bias=50)
Assign the span and bias to the expression above.
300Y1-50=(300X1-100+300X2+200X3+50)/3
Y1=[300/300X1+300/300X2+200/300X3+(-100+50)/300]/3+50/300
The coefficient of Input range above is «Y1=0.3333X1+0.3333X2+0.2222X3+0.1111»
(When inputting the data, enter “0.3333" for the coefficient and 11.11(%) for the bias.)

< Rrecalculation >
Input 1 :100°C(66.67%), Input 2 :200°C (66.67%), Input 3 :150°C (50%)
The average is (100+200+150)/3=150°C
Assign the Inputs to the X1, X2 and X3.
Y1=0.3333*0.6667+0.3333*0.6667+0.2222*0.5+0.1111
Y1=0.6666
Output=300*0.6666-50=149.98

Connection Diagram

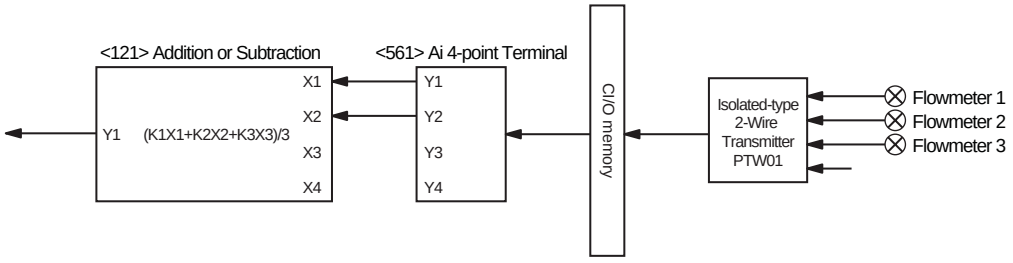

NOTE: No. < >of the Field Terminal is block model of the LCB (CS1W-LCB01/05).

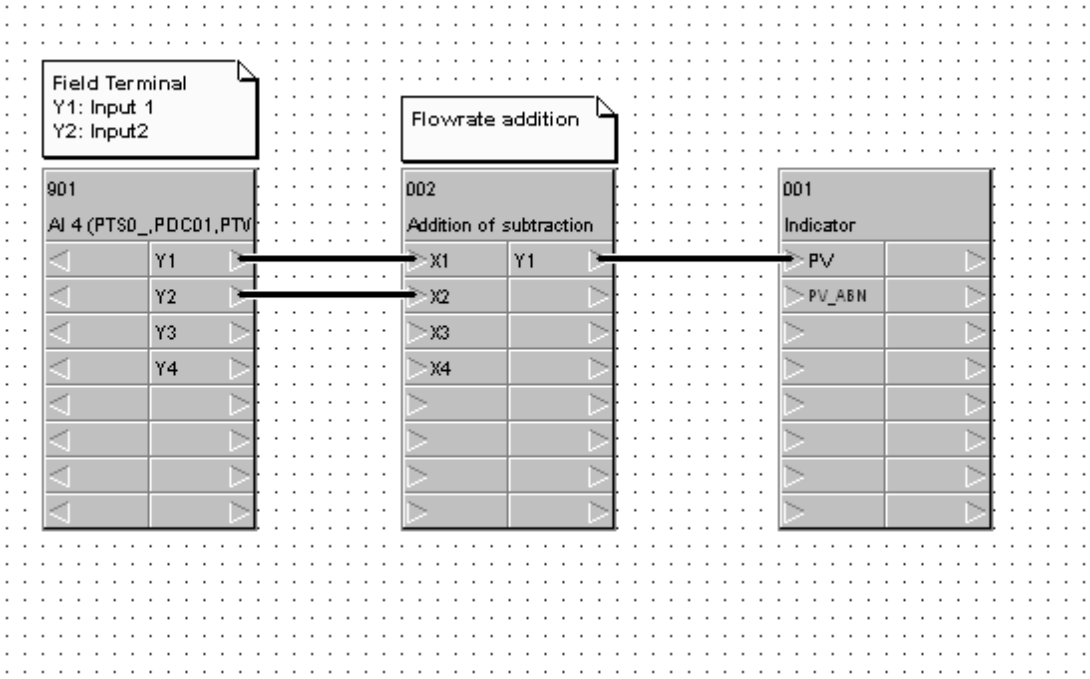

ITEM list (Arithmetic operations Addition or Subtraction)

Block address	Block Model	Block Name	ITEM	Comment	Data	Settings
000	<000>	System Common Block	004	System common operation cycle	1	0.1sec
			018	START mode at power ON	1	Hot Start
001	<034>	Indicator	004	Operation cycle	1	0.1sec
002	<121>	Addition or Subtraction	004	Operation cycle	1	0.1sec
			011	K1 gain	0.8	
			012	K2 gain	0.60	
			013	A1 Bias	0	% setting
			014	A2 Bias	0	% setting
			015	A3 Bias	0	% setting
901	<561>	AI4-point Terminal	004	Operation cycle	1	0.1sec
			007	Unit No,	00	Input unit No.
			010	Common or Y input conversion	1	0-4000

CSV Tag list (Arithmetic operations Addition or Subtraction)

Block address	Block Model	Block Name	Tag Name	Tag Comment	Scaling upper limit	Scaling lower limit	Decimal point position	Unit
001	<034>	Indicator	FI100	Flow rate accumulator	5000	500	1	L/min
002	<012>	Addition or Subtraction	FX101	Addition or Subtraction	-	-	-	-

4-14 Arithmetic Operation (Division)

Objective	Calculates coefficient and bias values for division of two analog signals
Process	

Process Flow

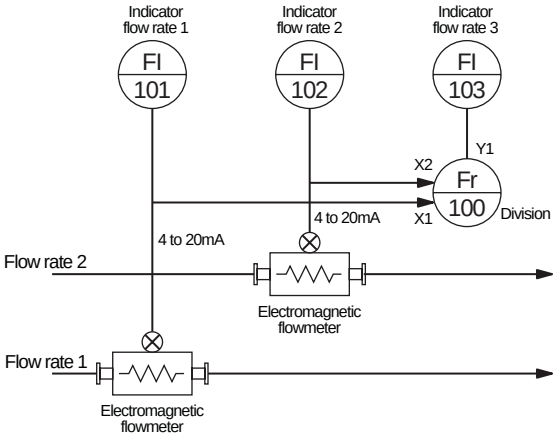

The Division block performs division, according to the following expression:

$$Y1= \frac{K1X1+A1}{K2X2+A2} +A3$$

< Operation Example >
The ranges of each signals are set as the following:
Input X1: 0 to 120m^3/h
Input X2: 0 to 80m^3/h
Output Y1: 0 to 4.0

Assign the spans of the Inputs and output.
4.0Y1=120X1/80X2
K1=120/4.0=30
K2=80
A1=A2=A3=0
The expression of this example is as follows:
Y1=0.375X1/X2

< Rrecalculation >
Input X1=100 (83.33%)
Input X2=50 (62.5%)
Flow rate ratio=2.0
Y1=0.375*0.8333/0.625=0.5
The 50% of output range ratio (0 to 4.0) is 2.0, which is equal to the result of the expression.

Description	The coefficients of Division in which a bias is added to the output can be calculated as the following: (outspan*Y+outBI) = (in1span*X1+in1BI1)/(in2span*X2+in2BI) Here, the outspan, outBI and in2 mean the Output span, Output Bias and Input 2, respectively. The X and Y indicate 0 to 1 signals. < Operation Example > Output :0.5 to 2.5 (Span=2.0 Bias=0.5) Input 1 :0 to 120m^3/h (Span=120 Bias=0) Input 2 :0 to 80m^3/h (Span=80 Bias=0) Assign the Span and Bias into the expression. 2.0Y1+0.5=120X1/80X2 Y1=(120*X1/2.0)/(80*X2)-0.5/2.0 The coefficient of Input/output range written above is «Y=0.75*X1/X2-0.25». (The coefficient is set to 0.75 and Bias is specified to 25.0) < Rrecalculation > Input X1 :100m^3/h (83.33%), Input X2 :50m^3/h (62.5%), flow rate ratio=2 Assign Input values to the X1 and X2. Y=0.75*0.8333/0.625-0.25=0.75 Output=(2.5-0.5)*0.75+0.5=2.0

Connection Diagram

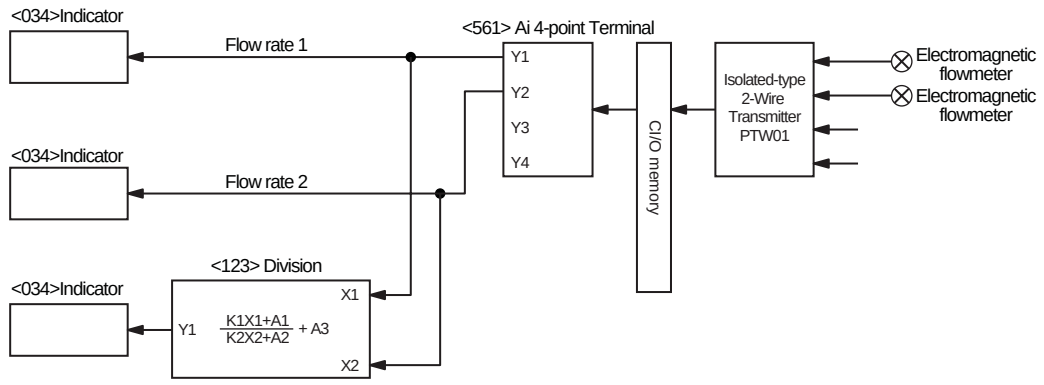

NOTE: No. < >of the Field Terminal is block model of the LCB (CS1W-LCB01/05).

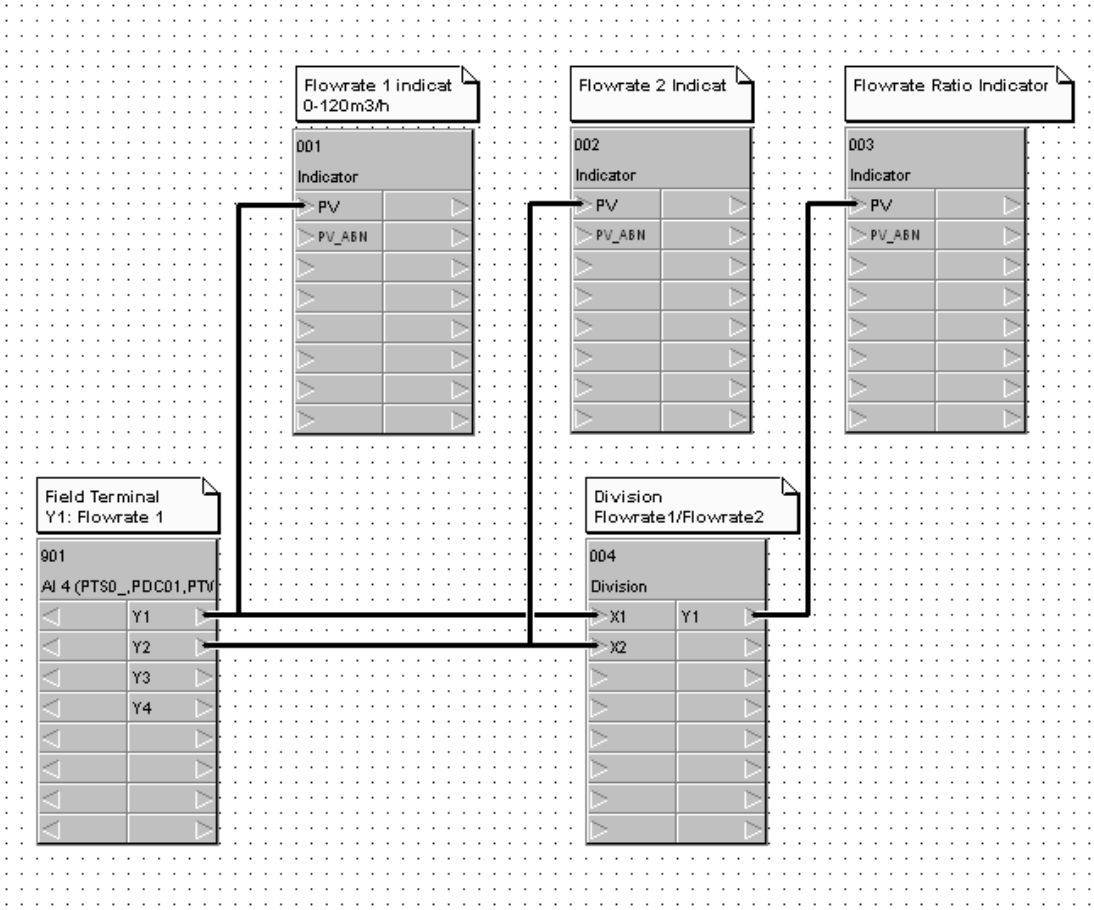

ITEM list (Four arithmetic operations Division)

Block address	Block Model	Block Name	ITEM	Comment	Data	Settings
000	<000>	System Common Block	004	System common operation cycle	1	0.1sec
			018	START mode at power ON	1	Hot Start
001	<034>	Indicator	004	Operation cycle	1	0.1sec
002	<034>	Indicator	004	Operation cycle	1	0.1sec
003	<034>	Indicator	004	Operation cycle	1	0.1sec
004	<123>	Division	004	Operation cycle	1	0.1sec
			011	K1 gain	0.375	
			012	K2 gain	1	
			013	A1 bias	0	% setting
			014	A2 bias	0	% setting
			015	A3 bias	0	% setting
901	<561>	AI4-point Terminal	004	Operation cycle	1	0.1sec
			007	Unit number	00	Input unit No.
			010	Common or Y input range conversion	1	0-4000

CSV Tag list (Four arithmetic operations Division)

Block address	Block Model	Block Name	Tag Name	Tag Comment	Scaling upper limit	Scaling lower limit	Decimal point position	Unit
001	<034>	Indicator	FI101	Flow rate 1	12000	0	2	m3/h
002	<034>	Indicator	FI102	Flow rate 2	8000	0	2	m3/h
003	<034>	Indicator	FI103	Flow rate ratio	4000	0	3	-
004	<123>	Division	Fr100	Subtraction	-	-	-	-

4-15 Arithmetic Operation (Multiplication)

Objective	Multiplies two analog signals.
Process	

Process Flow

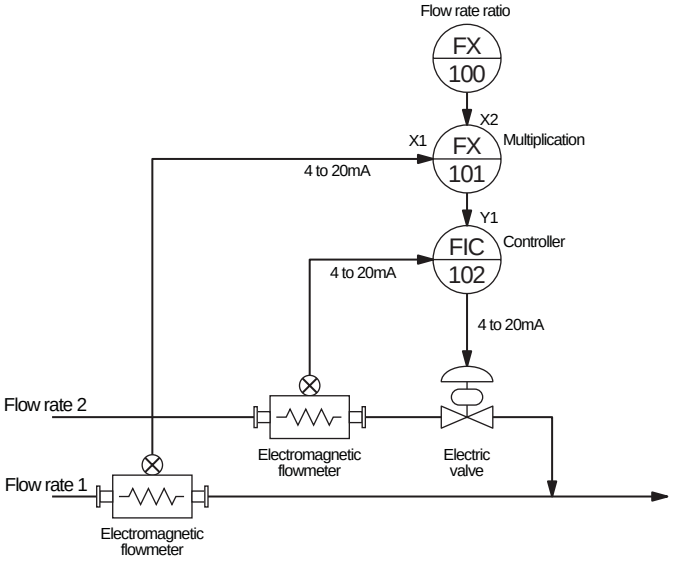

The Multiplication block performs multiplication based on the expression below:
Y1=(K1X1+A1)*(K2X2+A2)+A3
In case that Input/Output ranges are set as:
Input 1: 0 to 800L/min
Input 2: 0.5 to 2.0
Output: 0 to 1200L/min,
the coefficient bias can be calculated by the following expression:
1200Y1=800X1*(1.5X2+0.5)+0
Y1=800/1200X1*(1.5X2+0.5)
Y1=0.667X1*(1.5X2+0.5)

< Rrecalculation >
Input 1: 600L/min (75%)
Input 2: 1.0 (33.3%)
Output: 600L/min
Assign Input values of X1 and X2.
Y1=0.667*0.75*(1.5*0.333+0.5)=0.5
Output range is 600L/min (50% of 1200L/min).

Connection Diagram

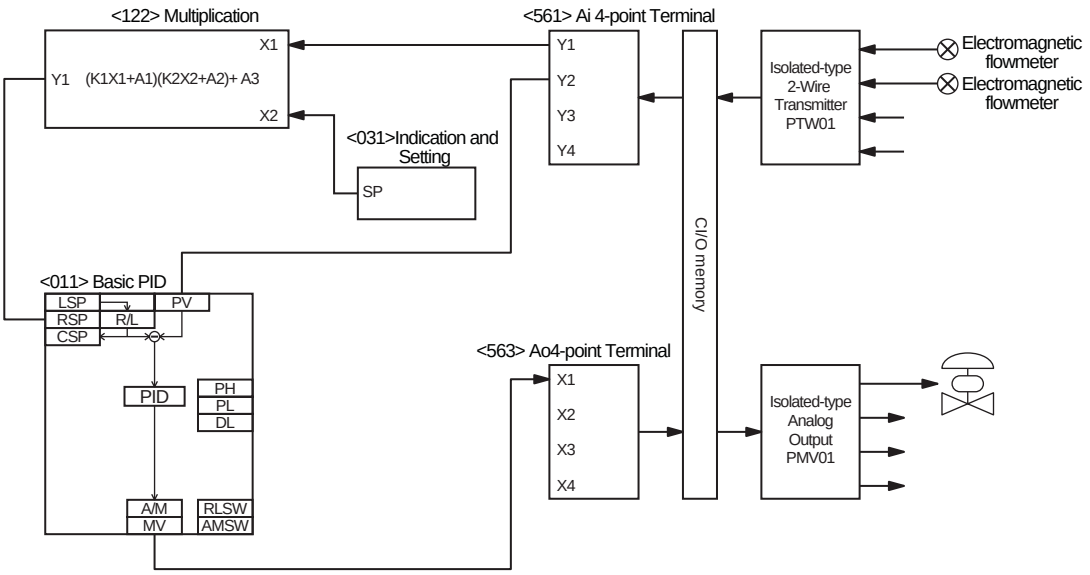

NOTE: No. < >of the Field Terminal is block model of the LCB (CS1W-LCB01/05).

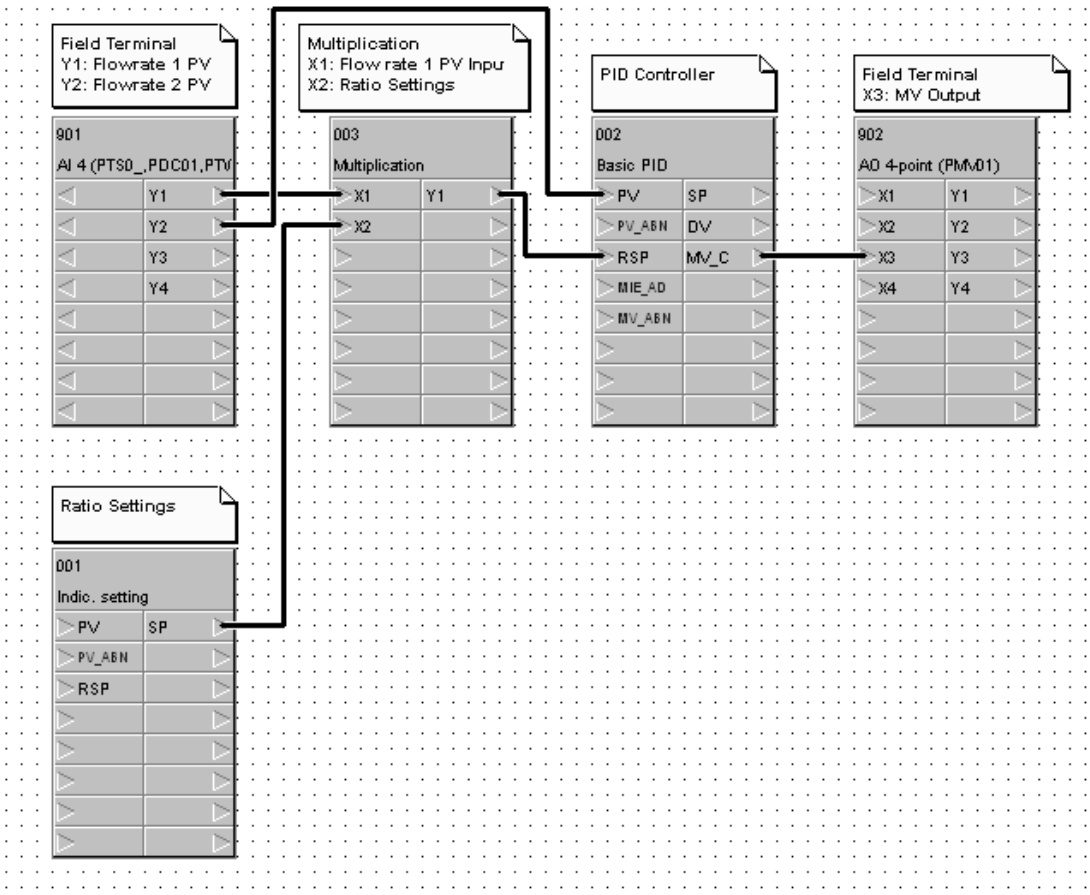
Field Terminal
Y1: Flowrate 1 PV
Y2: Flowrate 2 PV
Multiplication
X1: Flow rate 1 PV Inpu
X2: Ratio Settings
PID Controller
Field Terminal
X3: MV Output
901
AI 4 (PTS0_,PDC01,PTV
Y1
Y2
Y3
Y4
003
Multiplication
X1
Y1
X2
002
Basic PID
PV
SP
PV_ABN
DV
RSP
MV_C
MIE_AD
MV_ABN
902
AO 4-point (PMV01)
X1
Y1
X2
Y2
X3
Y3
X4
Y4
Ratio Settings
001
Indic. setting
PV
SP
PV_ABN
RSP

ITEM list (Four arithmetic operations Multiplication)

Block address	Block Model	Block Name	ITEM	Comment	Data	Settings
000	<000>	System Common Block	004	System common operation cycle	1	0.1sec
			018	START mode at power ON	1	Hot Start
001	<031>	Indication and Seting	004	Operation cycle	1	0.1sec
002	<011>	Basic PID	004	Operation cycle	1	0.1sec
			024	Set Point setting mode	1	Remote/Local
			052	Control action	0	Reverse
003	<122>	Multiplication	004	Operation cycle	1	0.1sec
			011	K1 gain	0.667	
			012	K2 gain	1.50	
			013	A1 bias	0	% setting
			014	A2 bias	50.0	% setting
			015	A3 bias	0	% setting
901	<561>	AI4-point Terminal	004	Operation cycle	1	0.1sec
			007	Unit number	00	Input unit No.
			010	Common or Y input range conversion	1	0-4000
903	<563>	AO4-point Terminal	004	Operation cycle	1	0.1sec
			007	Unit number	02	Output unit No.

CSV Tag list (Four arithmetic operations Multiplication)

Block address	Block Model	Block Name	Tag Name	Tag Comment	Scaling upper limit	Scaling lower limit	Decimal point position	Unit
001	<031>	Indication and Seting	FX100	Flow rate ratio	2000	500	3	-
002	<011>	Basic PID	FIC102	Flow rate controller	12000	0	1	L/min
003	<122>	Multiplication	FX101	Multiplication	-	-	-	-

4-16 Arithmetic Operation (Average Value)

Objective	Calculates average of multiple analog signals.
Process	

Process Flow

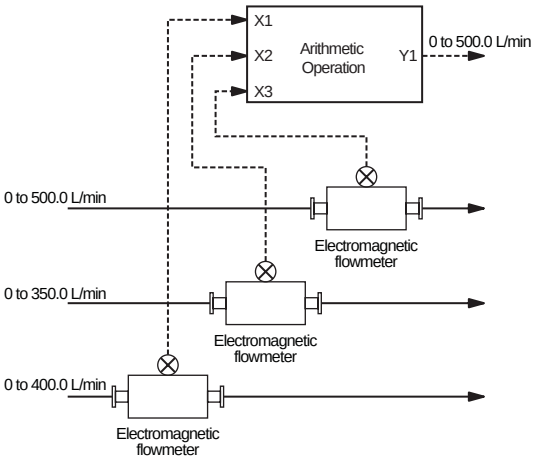

Below is the arithmetic expression for average operation.
Y1=(K1X1+K2X2 ···· + KnXn)/n

To execute average operation, utilize the Arithmetic Operation block.
< Operation example >
When ranges of each signals are set as shown below:
Input X1: 0 to 400 L/min
Input X2: 0 to 350 L/min
Input X3: 0 to 500 L/min
Output Y1: 0 to 500 L/min

Assign the span of each Inputs and Ouput.
500Y1=(400X1+350X2+500X3)/3
Y1=(400/500X1+350/500X2+500/500X3)/3
Y1=0.2667X1+0.2333X2+0.3333X3

< Recalculation >
When each input are set as written below:
Input X1: 200 L/min (50%)
Input X2: 250 L/min (71.43%)
Input X3: 280 L/min (56%)
Y1=0.2667*0.5+0.2333*0.7143+0.3333*0.56
Y1=0.4866
The 48.66% of Output 0 to 500 L/min equals to 243.3 L/min
(200+250+280)/3=243.3 L/min

Description

To calculate the coefficient/bias of average operation for signals with bias, utilize the following expression:
(Outspan*Y1+outBI)=[(in1Span*X1±in1BI)+)(in2span*X2±in2BI)····(in n span*Xn±in n BI)]/n
Here, the outspan, outBI, and in2 mean a output span, bias of Output, and Input 2, respectively.
The X and Y indicate 0 to 1 signal.

< Operation example >
Output: -50 to 250°C(span=300, bias=-50)
Input1 : -100 to 200°C(span=300, bias=-100)
Input2 : 0 to 300°C(span=300, bias=0)
Input3 : +50 to 250°C(span=200, bias=50)
Assign the span and bias to the expression above.
300Y1-50=(300X1-100+300X2+200X3+50)/3
Y1=[300/300X1+300/300X2+200/300X3+(-100+50)/300]/3+50/300
The coefficient of Input range above is «Y1=0.3333X1+0.3333X2+0.2222X3+0.1111»
(When inputting the data, enter “0.3333" for the coefficient and 11.11(%) for the bias.)

< Rrecalculation >
Input 1 :100°C(66.67%), Input 2 :200°C (66.67%), Input 3 :150°C (50%)
The average is (100+200+150)/3=150°C
Assign the Inputs to the X1, X2 and X3.
Y1=0.3333*0.6667+0.3333*0.6667+0.2222*0.5+0.1111
Y1=0.6666
Output=300*0.6666-50=149.98

Connection Diagram

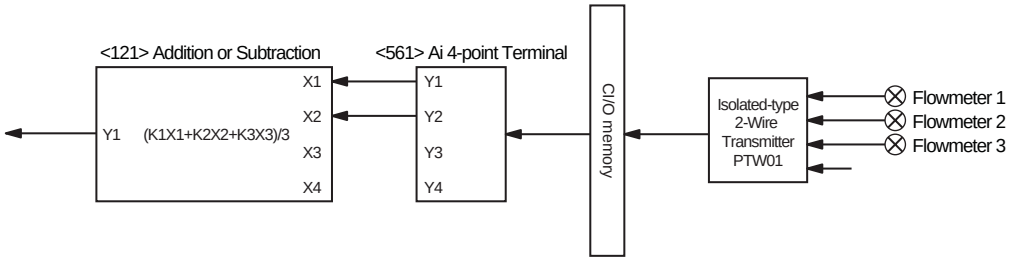

NOTE: No. < >of the Field Terminal is block model of the LCB (CS1W-LCB01/05).

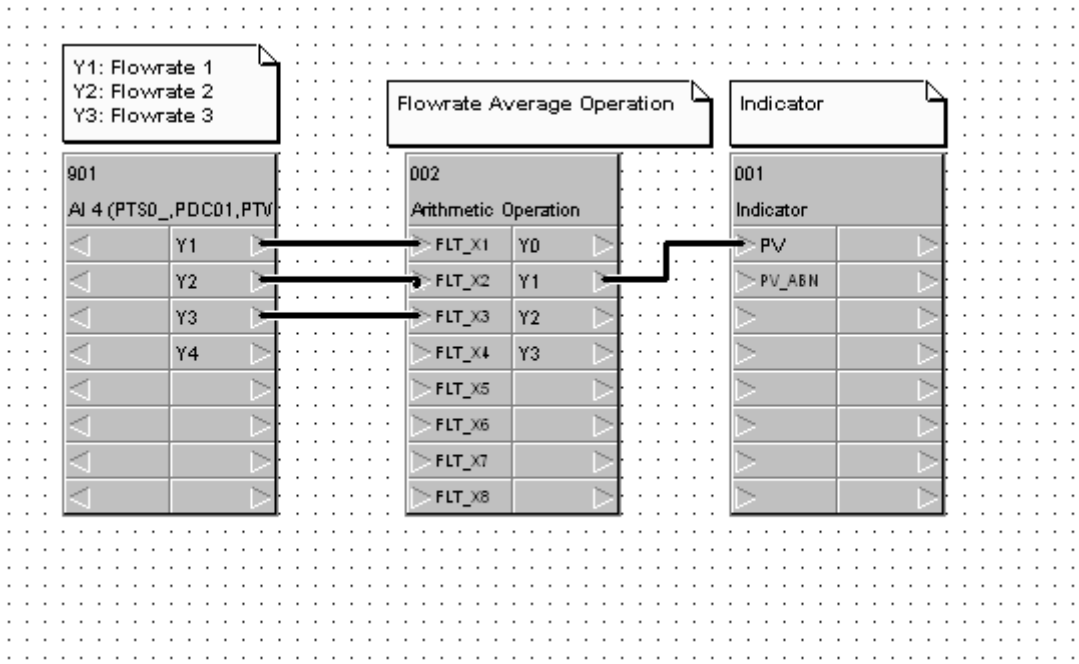

ITEM list (Four arithmetic operations Average)

Block address	Block Model	Block Name	ITEM	Comment	Data	Settings
000	<000>	System Common Block	004	System common operation cycle	1	0.1sec
			018	START mode at power ON	1	Hot Start
001	<034>	Indicator	004	Operation cycle	1	0.1sec
002	<126>	Arthmetic Operation	004	Operation cycle	1	0.1sec
			031	X1 scaling upper limit	1.0000E+02	
			032	X1 scaling lower limit	0E0	
			033	X2 scaling upper limit	1.0000E+02	
			034	X2 scaling lower limit	0E0	
			035	X3 scaling upper limit	1.0000E+02	
			036	X3 scaling lower limit	0E0	
			081	THEN expression	A1*X1+A2*X2+A3*X3	
			091	Output reverse scaling upper limit	1.0000E+02	
			092	Output reverse scaling lower limit	0E0	
			051	A1	2.6667E-1	
			052	A2	2.3333E-1	
			053	A3	3.3333E-1	
901	<561>	AI4-point Terminal	004	Operation cycle	1	0.1sec
			007	Unit number	00	Input unit No.
			010	Common or Y input range conversion	1	0-4000

CSV Tag list (Four arithmetic operations Average)

Block address	Block Model	Block Name	Tag Name	Tag Comment	Scaling upper limit	Scaling lower limit	Decimal point position	Unit
001	<034>	Indicator	FI100	Aveage	5000	0	1	L/min
002	<126>	Arthmetic Operation	FX101	Arthmetic Operation	-	-	-	-

4-17 Time-proportional Output Controller

Objective	PID control for ON/OFF control object
Process	Temperature control of heaters

Process Flow

The Analog/Pulse Width Converter block is connected to the PID Control block and converts the MV of the PID Control block into duty cycle pulse width signal which is proportional to the MV signal.

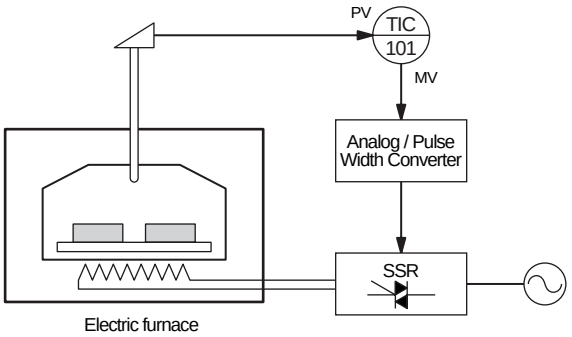

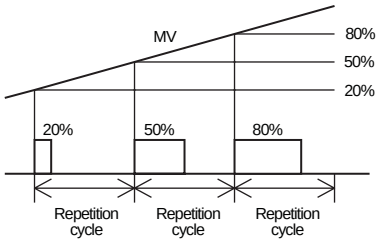

This function block is utilized when controlling ON/OFF heaters by output of PID controller.

Connection Diagram

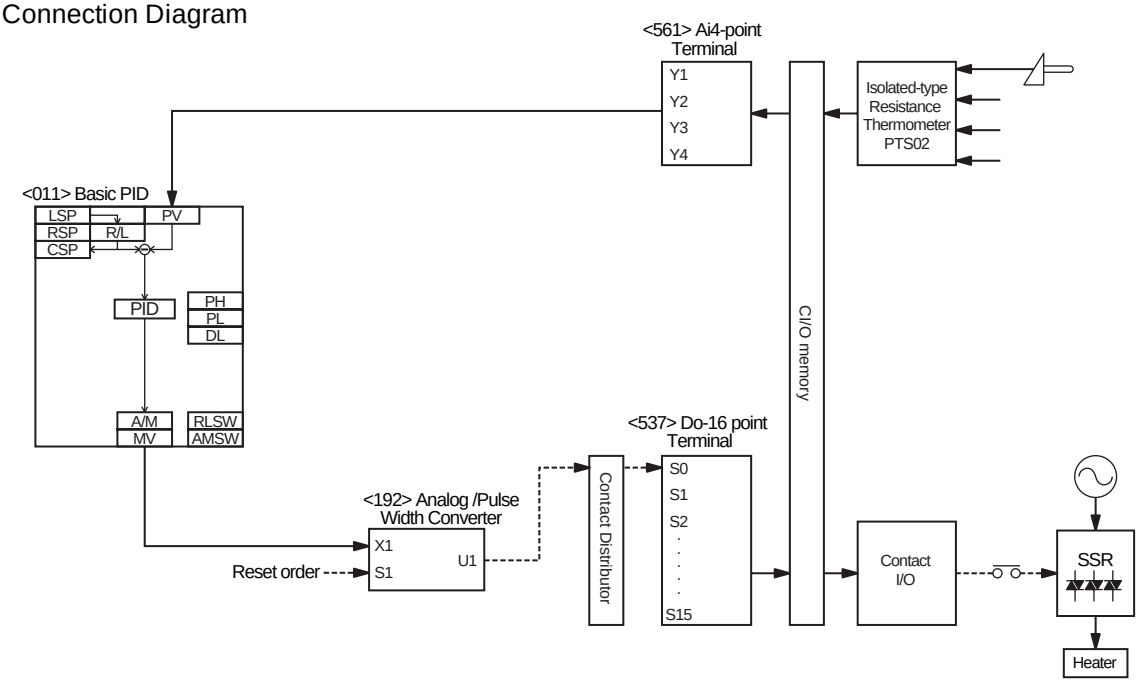

NOTE: No. < >of the Field Terminal is block model of the LCB (CS1W-LCB01/05).

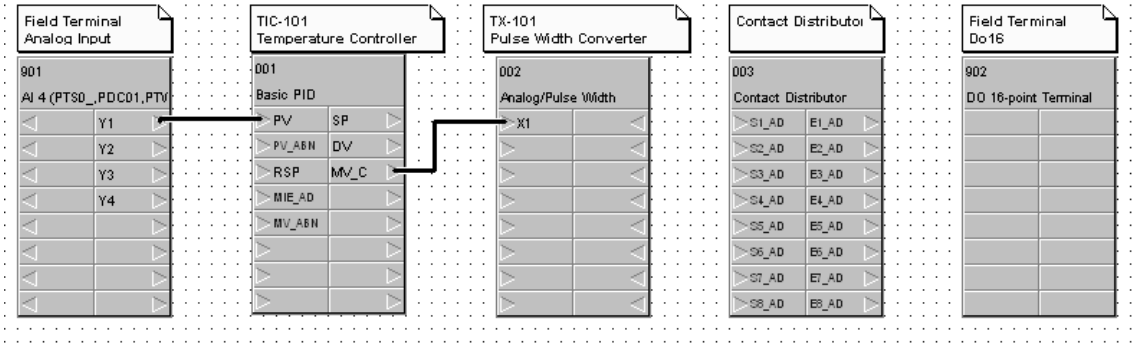

ITEM list (Time-proportional output controller)

Block address	Block Model	Block Name	ITEM	Comment	Data	Settings
000	<000>	System Common Block	004	System common operation cycle	1	0.1sec
			018	START mode at power ON	1	Hot Start
001	<011>	Basic PID	004	Operation cycle	1	0.1sec
			024	Set Point setting mode	0	Local
			052	Control action	0	Reverse
002	<192>	Analog/Pulse Width Converter	004	Operation cycle	1	0.1sec
			009	Pulse cycle time		1-1000.0sec
003	<201>	Contact Distributor	004	Operation cycle	1	0.1sec
			006	Output type	0	Constant output
901	<561>	AI4-point Terminal	004	Operation cycle	1	0.1sec
			007	Unit Number	00	
			010	Common or Y1 input range conversion	1	0-4000
902	<514>	DO16-point terminal	004	Operation cycle	1	0.1sec
			007	CIO word No.	0000	

CSV Tag list (Time-proportional output controller)

Block address	Block Model	Block Name	Tag Name	Tag Comment	Scaling upper limit	Scaling lower limit	Decimal point position	Unit
001	<011>	Basic PID	TIC-101	Temperature Controller	8000	0	1	°C
002	<192>	Analog/Pulse Width Converter	TX-101	Analog/Pulse Width Converter	-	-	-	-

4-18 Neutralization Control (Acid and Alkali Control)

Objective	Linearizes open loop gain of non-linear process
Process	PH neutralizing control

Process Flow

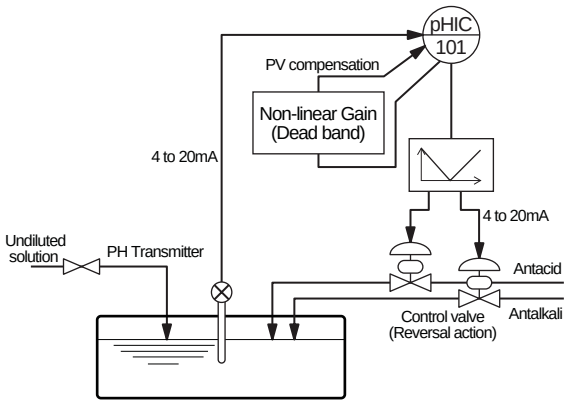

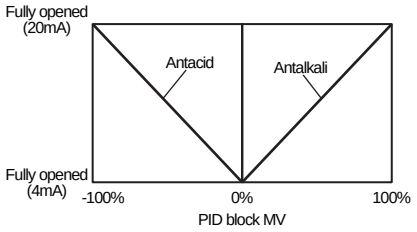

Description	In PH neutralizing process, process gain tends to be large at a point near the neutralization point. In this non-linear process, the larger the deviation becomes, the smaller the gain becomes. In case that PID tuning for a linear controller is executed near the neutralization point, the response of the controller becomes slow at the point when the deviation is large. When the controller is tuned at the point distant from the neutralization point, PH value fluctuates at the point open loop gain exceeds 1. In this application, the gain of the controller is tuned to be low near the neutralization point by utilizing Non-linear (Dead Band) block. Therefore, stable control can be achieved by keeping the open loop gain uniform over the entire range. The circuit is built as described above, because not deviation but PV compensation is taken into the Basic or Advanced PID blocks as an input. The Split Converter block is entered so that this system can be utilized for applications in which PH of the uundiluted solution changes from acid to alkaline property. The Split Converter block operates depending on the MV signal (-100 to 100%) of the PID block. Therefore, set the MV low limit output to -105.00%, or enter “1” to the Split Converter block ITEM030 (Write PID block MV high/low limit bit). When controller’s MV output (4 to 20mA) is controlled to obtain V characteristic of the control valve positionner, the acid control valve fully opens at 4mA and completely closes at 12mA. (Airless Open). However, if Split Converter is entered, both acid and alkali control valves completely close at 4mA and fully open at 20mA, changing with MV (-100 to 100%) of PID block. (Airless Close).

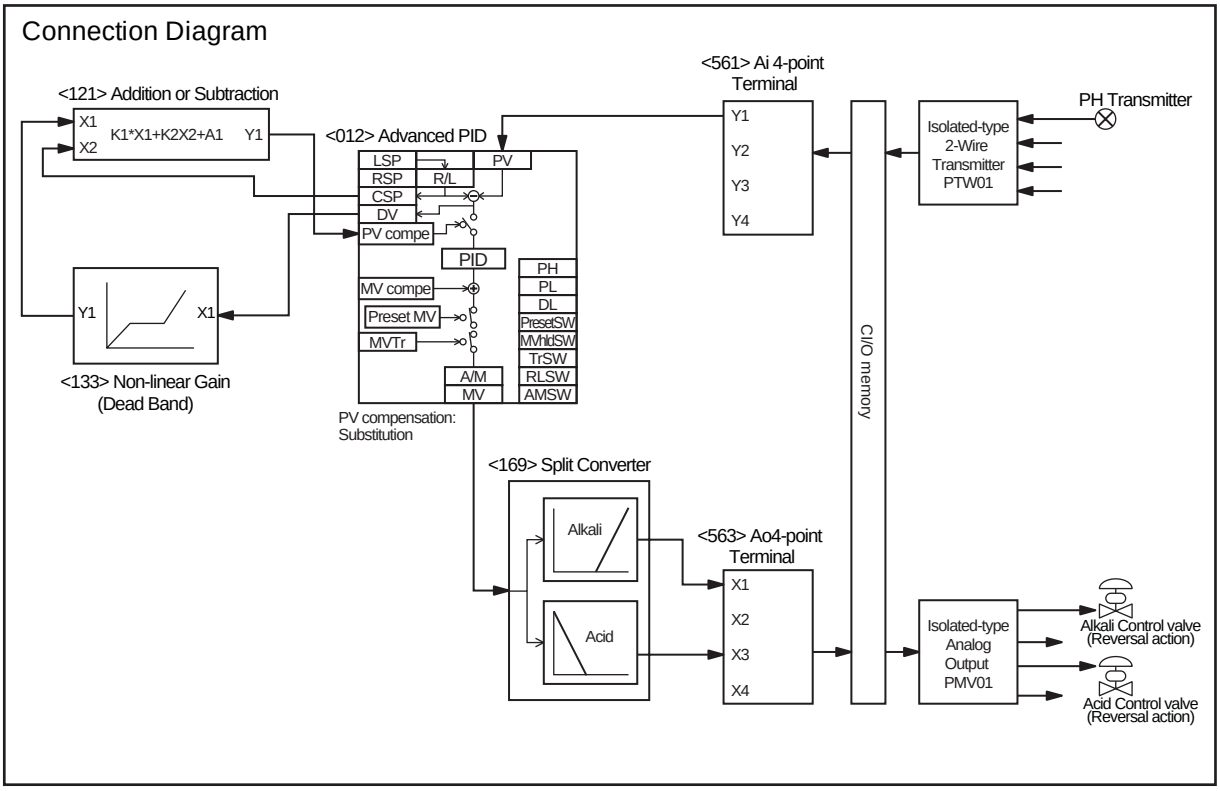

NOTE: No. < >of the Field Terminal is block model of the LCB (CS1W-LCB01/05).

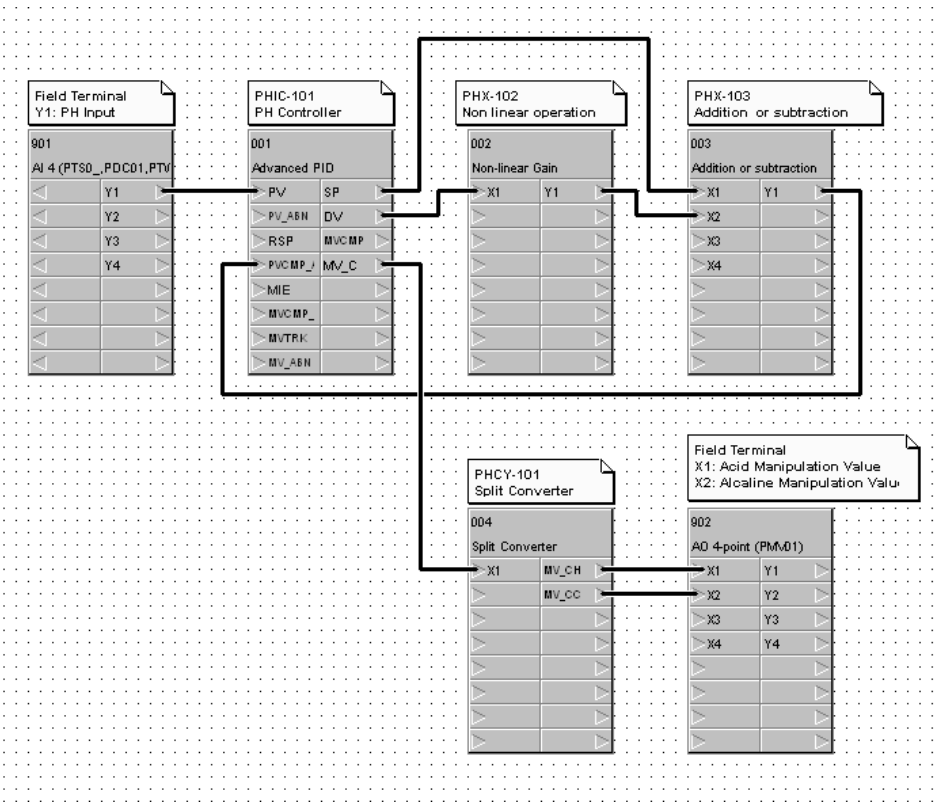

ITEM list (Neutralizing)

Block address	Block Model	Block Name	ITEM	Comment	Data	Settings
000	<000>	System Common Block	004	System common operation cycle	1	0.1sec
			018	START mode at power ON	1	Hot Start
001	<012>	Advanced PID	004	Operation cycle	1	0.1sec
			045	PV compensation mode	3	Substitution
			046	PV compensation ON/OFF	1	ON
			052	Control action	0	Reverse
			077	Low MV limit	-105.00	%
002	<133>	Non-linear Gain (Dead Band)	004	Operation cycle	1	0.1sec
			009	K1 gain	1.000	
			010	K2 gain	0.500	
			011	K3 gain	1.000	
			012	Segment point A1	10.00	
003	<121>	Addition or Subtraction	004	Operation cycle	1	0.1sec
			015	K1 gain	1.000	
			016	K2 gain	1.000	
			018	A1 bias	0.00	
004	<169>	Split Converter	004	Operation cycle	1	0.1sec
			010	Reverse heating MV	0	Do not reverse.
			011	Reverse coling MV	0	Do not reverse.
			022	Dead band (DB)	0	
			040	PID block PID parameters write bit	1	Write
			045	Acid side P	*	
			046	Acid side I	*	
			047	Acid side D	*	
			048	Alkali side P	*	
			049	Alkali side I	*	
			050	Alkali side D	*	
901	<561>	AI4-point Terminal	004	Operation cycle	1	0.1sec
			007	Unit Number	00	Input Unit No.
			010	Common or Y1 input range conversion	1	0-4000
902	<563>	AO4-point Terminal	004	Operation cycle	1	0.1sec
			007	Unit Number	00	Output Unit No.

CSV Tag list (Neutralizing)

Block address	Block Model	Block Name	Tag Name	Tag Comment	Scaling upper limit	Scaling lower limit	Decimal point position	Unit
001	<012>	Advanced PID	PHIC-101	PH controller	1400	0	2	PH
002	<133>	Non-linear Gain (Dead Band)	PHX-102	Non-linear Gain	-	-	-	-
003	<121>	Addition or Subtraction	PHX-103	Addition or Subtraction	-	-	-	-
004	<169>	Split Converter	PHCV-101	Split Converter	-	-	-	-

4-19 Electric Valve Control by Electric Positionner

Objective	Controls reversible electric rotating control object.
Process	Controllers with electric positionner are utilized for controlling electric valve.

Process Flow

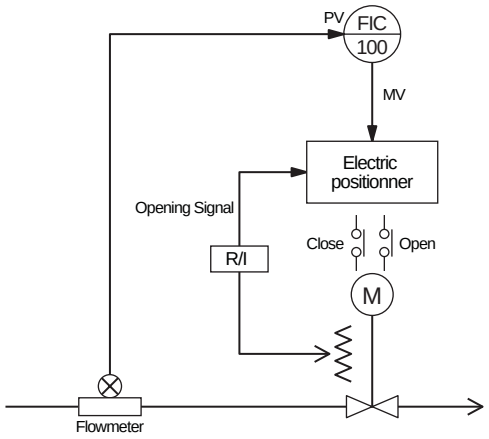

An example of opening control for electric valves by electric positionner. The electric positionner compares the MV and feedback opening signal to turn ON/OFF the contact to open/close the control object when the deviation exceeds the dead band.
When the opening signal becomes equal to the MV (when the deviation entered the range of dead band), the contact is turned OFF.
A dead band is set in order to prevent chattering.

Connection Diagram

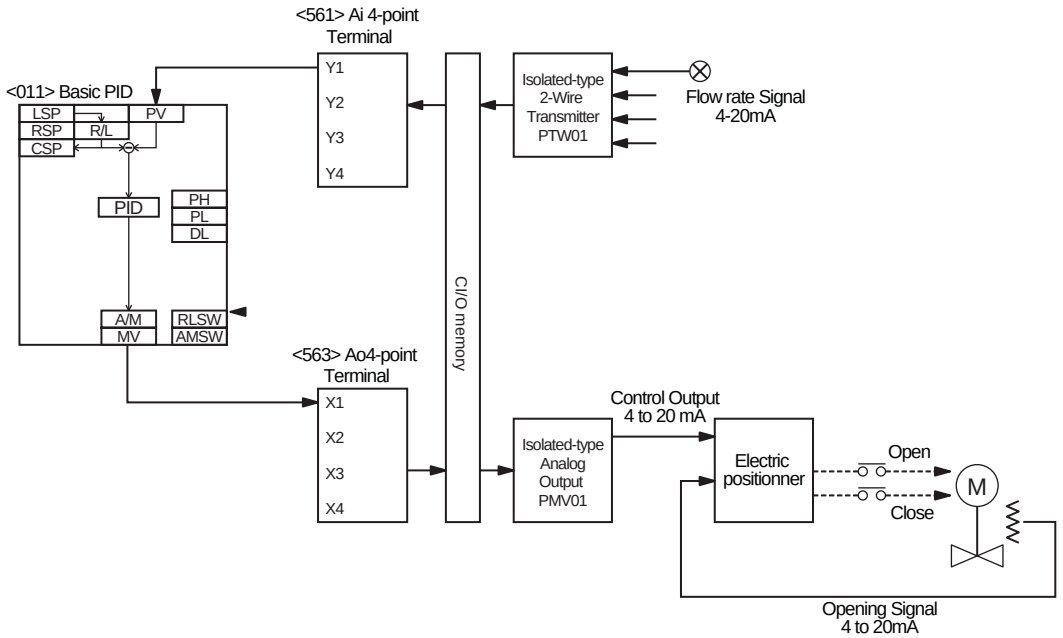

Description	When the deviation between MV (X2) of the PID Controller and Opening Input (X1) is larger than the Dead-band (ITEM17), Opening Manipulation Output (U1) or Closing Manipulation Output (U2) is turned ON. In case that the deviation is smaller than the Dead-band (ITEM17), both outputs are turned OFF. Time of opening/closing is determined by the following: Full-stroke time (ITEM15) x Opening deviation. In order to compensate backlash (lost time caused by mechanical hysteresis of control object when rotation direction is switched), specify Hysteresis setting (ITEM35). In case that both Opening and Closing output become “0” to switch rotation direction, manipulation output is controlled to be “0” during Restart control time (ITEM16) to protect the motor. To avoid sudden change when switching the location of operation by Remote/Local settings, input R/L signal to the TrSW of the controller and Opening signal to the MVTr.

NOTE: No. < >of the Field Terminal is block model of the LCB (CS1W-LCB01/05).

4-20 Dead Band Control (With Deviation Alarm)

Objective	Stops control when small control deviation is detected.
Process	Constant flow rate control of inflow and outflow amount for column liquid level control.

Process Flow

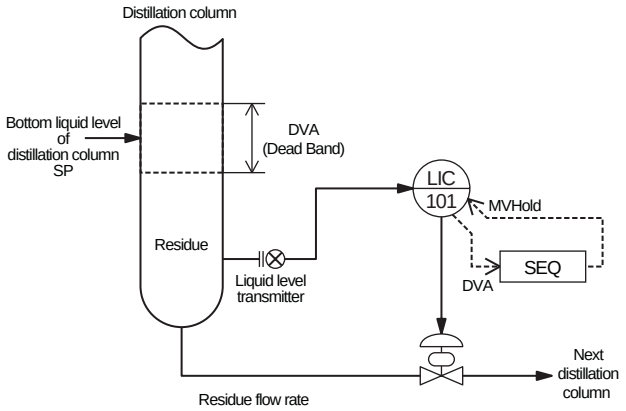

Residue of the distillation column changes with the feed amount or feed composition. Therefore, bottom liquid level fluctuates. When the liquid level is controlled to be constant, fluctuation of residue directly leads to the increase/decrease of the residue flow rate. It causes feed fluctuation of the next distillation column and stable operation cannot be continued. Therefore, do not operate PID control against fluctuation within a certain range and maintain the MV at a constant degree not to increase/decrease the flow rate to the lower process.

In the control method described in the left figure, the object written above can be achieved by detecting the dead band by the deviation alarm to turn ON the MV hold SW, so that MV signal can be kept constant.

Connection Diagram

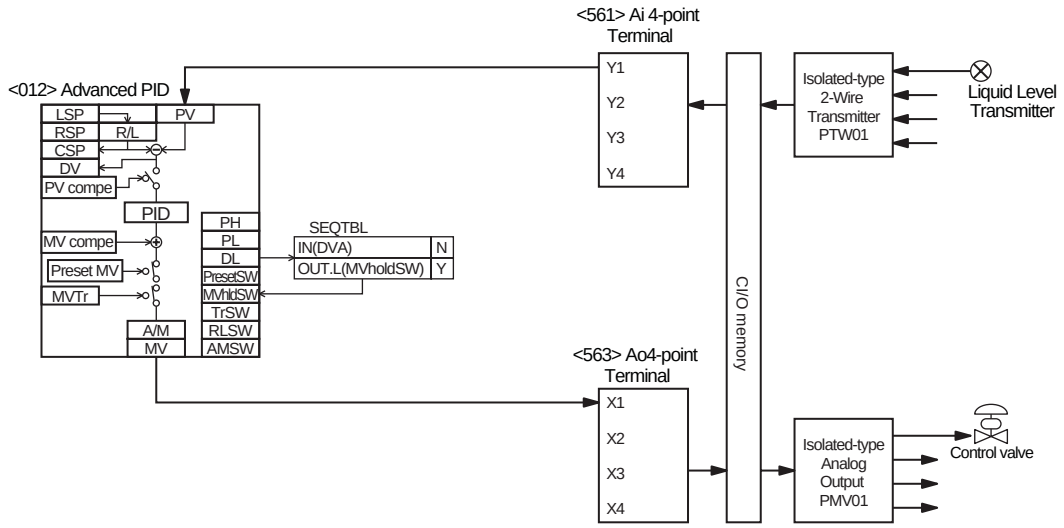

NOTE: No. < >of the Field Terminal is block model of the LCB (CS1W-LCB01/05).

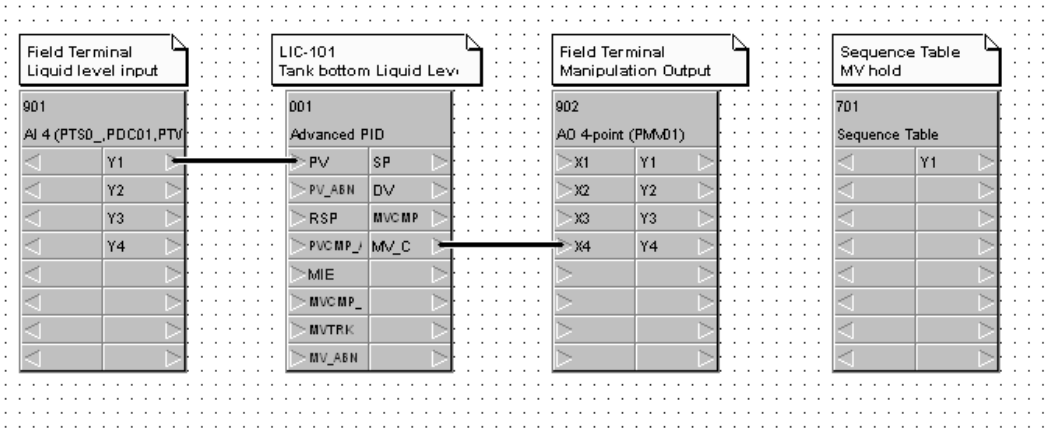

ITEM list (Dead Band Control by Deviation alarm)

Block address	Block Model	Block Name	ITEM	Comment	Data	Settings
000	<000>	System Common Block	004	System common operation cycle	1	0.1sec
			018	START mode at power ON	1	Hot Start
001	<012>	Advanced PID	004	Operation cycle	1	0.1sec
			024	Set Point setting mode	0	Local only
			041	Deviation alarm setting	*	Dead band
			052	Control action	1	Direct
701	<302>	Sequence Table	004	Operation cycle	1	0.1sec
			006	Block startup mode	0	Start at all times
901	<561>	AI4-point Terminal	004	Operation cycle	1	0.1sec
			007	Unit Number	00	Input Unit No.
			010	Common or Y1 input range conversion	1	0-4000
902	<563>	AO4-point Terminal	004	Operation cycle	1	0.1sec
			007	Unit Number	01	Output Unit No.

CSV Tag list (Dead Band Control by Deviation alarm)

Block address	Block Model	Block Name	Tag Name	Tag Comment	Scaling upper limit	Scaling lower limit	Decimal point position	Unit
001	<012>	Advanced PID	LIC-101	Bottom liquid level control	10000	0	1	mm

Dead Band Control by Deviation alarm /Sequence Table

IN(LIC-101.DVA)	Deviation alarm output value	N					
OUT L(LIC-101.S7)	MV hold SW	Y					

4-21 Flow Rate Control

Objective	Obtains constant slave flow rate ratio against master flow rate.
Process	For general processes, such as chemical feeding.

Process Flow

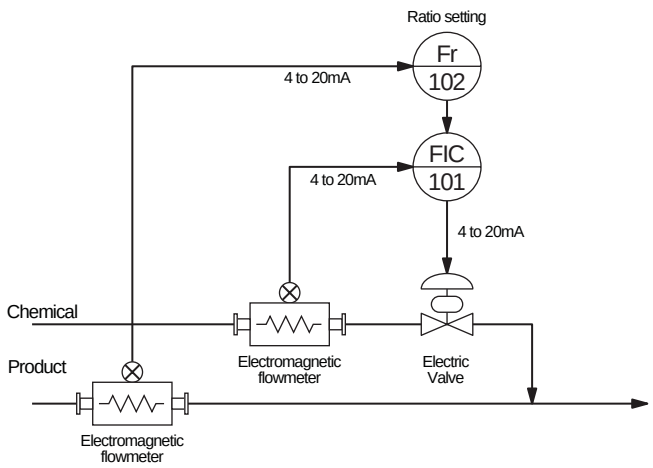

The Ratio calculation formula of Ratio Setting is as follows:

$$MV=k1\frac{SP}{100}(PV-A1)-B1$$

K1: Ratio gain
A1: Input bias
B1: Output bias

- Operation example -
Product flow rate range: 0 to 10m3/h
Ratio range: 0 to 1.5
Product flow arte PV: $6m^3/h$ (60%)
Ratio: 0.5 (1.5*33.33/100)

MV(chemical flow rate SP) can be calculated as follows:
MV=0.5*(0.6-0)-0=0.3
30% of 0 to $6m^3/h$ is $1.8m^3/h$

Description

The ratio means values which correspond not to industrial unit but to 0 to 100% signal. For example, when Product flow rate range is 0 to $10m^3/h$, Ratio range is 0 to 1.5, Chemical flow rate range is 0 to $6m^3/h$, Product flow rate is $6m^3/h$ (60%), and Ratio is 0.5 (60%*0.5=30%), the Chemical flow rate is $1.8m^3/h$ (30% of 0 to $6m^3/h$).

Ration setting Secondary flowmeter SP (Range: 0 to $6m^3/h$)

		Ration Setting PV									
Ratio	SP	100%		80%		60%		40%		20%	
1.5	100%	150%	$9m^3/h$	120%	$7.2m^3/h$	90%	$5.4m^3/h$	60%	$3.6m^3/h$	30%	$1.8m^3/h$
1.0	66.66%	100%	$6m^3/h$	80%	$4.8m^3/h$	60%	$3.6m^3/h$	40%	$2.4m^3/h$	20%	$1.2m^3/h$
0.5	33.33%	50%	$3m^3/h$	40%	$2.4m^3/h$	30%	$1.8m^3/h$	20%	$1.2m^3/h$	10%	$6m^3/h$

Connection Diagram

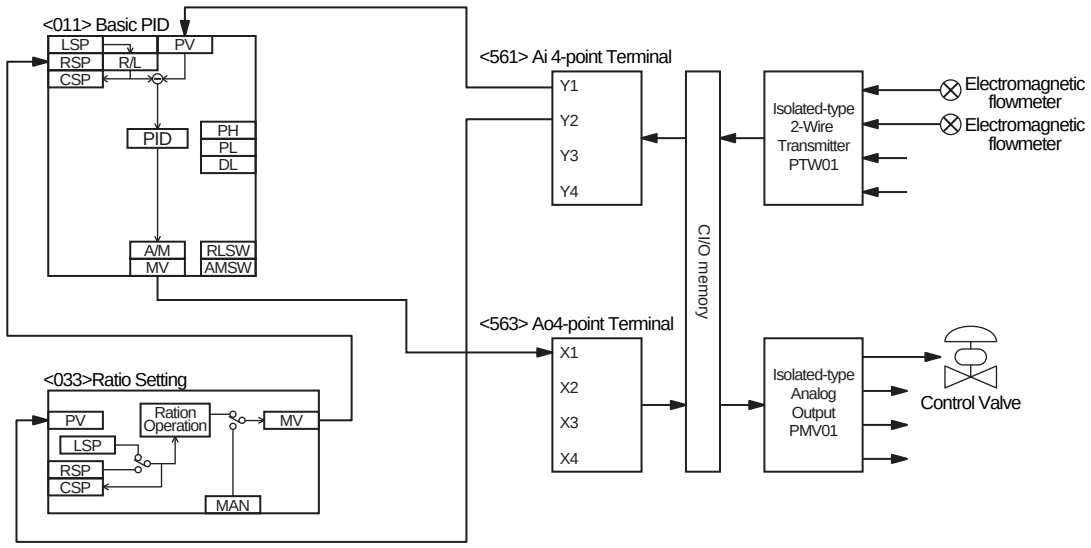

NOTE: No. < >of the Field Terminal is block model of the LCB (CS1W-LCB01/05).

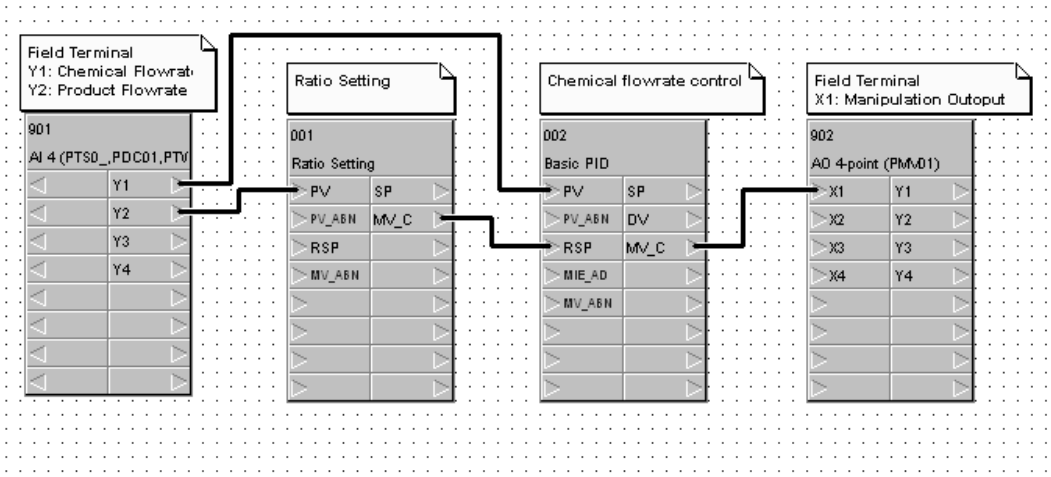

ITEM list (Ratio control of Flowrate)

Block address	Block Model	Block Name	ITEM	Comment	Data	Settings
000	<000>	System Common Block	004	System common operation cycle	1	0.1sec
			018	START mode at power ON	1	Hot Start
001	<033>	Ratio Setting	004	Operation cycle	1	0.1sec
			024	Ratio setting mode	0	Local only
			054	Ratio range	1.5	
			055	Input bias	0	
			056	Output bias	0	
002	<011>	Basic PID	004	Operation cycle	1	0.1sec
			024	Set Point setting mode	1	Remote/Local
			052	Control action	0	Reverse
901	<561>	AI4-point Terminal	004	Operation cycle	1	0.1sec
			007	Unit Number	00	Input Unit No.
			010	Common or Y1 input range conversion	1	0-4000
902	<563>	AO4-point Terminal	004	Operation cycle	1	0.1sec
			007	Unit Number	01	Output Unit No.

CSV Tag list (Ratio control of Flowrate)

Block address	Block Model	Block Name	Tag Name	Tag Comment	Scaling upper limit	Scaling lower limit	Decimal point position	Unit
001	<033>	Ratio Setting	FR102	Ratio Setting	1500	0	3	-
002	<011>	Basic PID	FIC101	Product flowrate	600	0	2	m3/h